Red Sea REEFER™

250 G2+ / 300 G2+

Aquarium & Cabinet Assembly Manual

Resource & Support Center:
www.redseafish.com/support/

Red Sea

Water Management

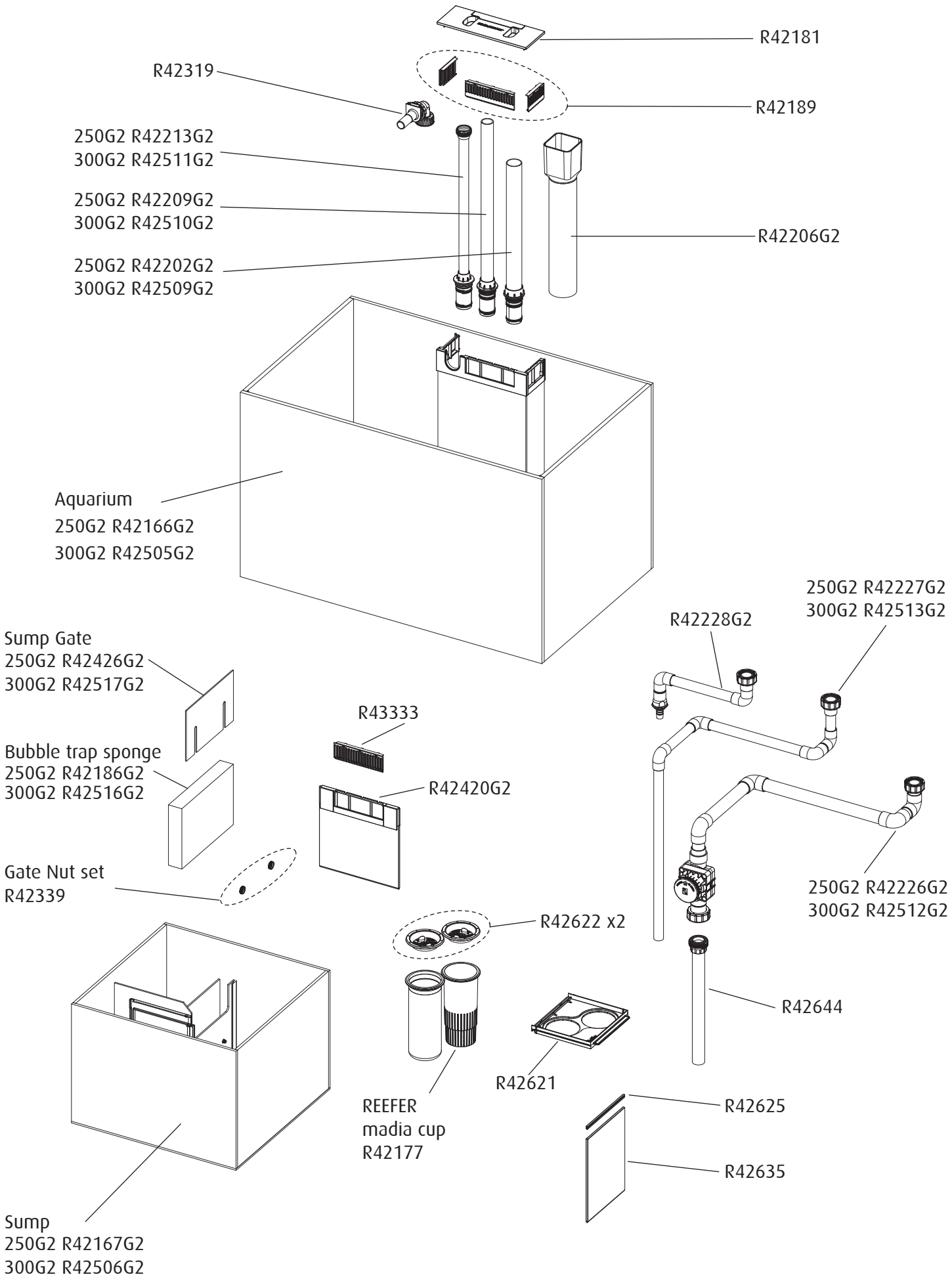

Cabinet

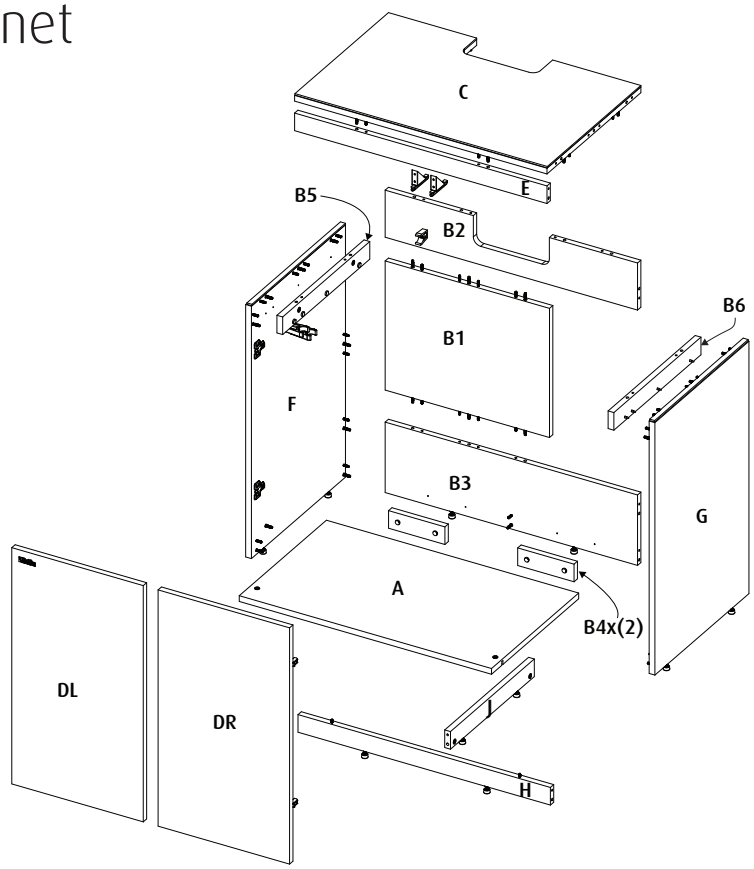

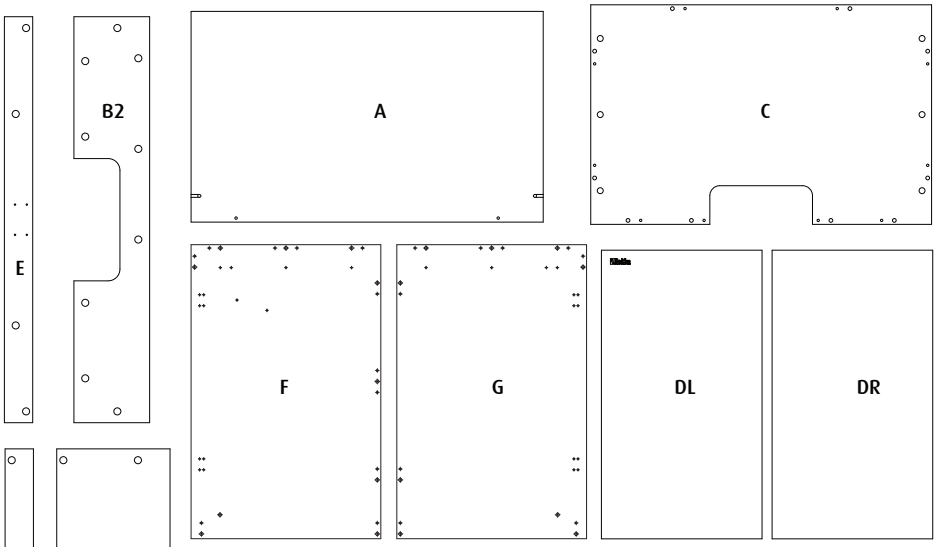

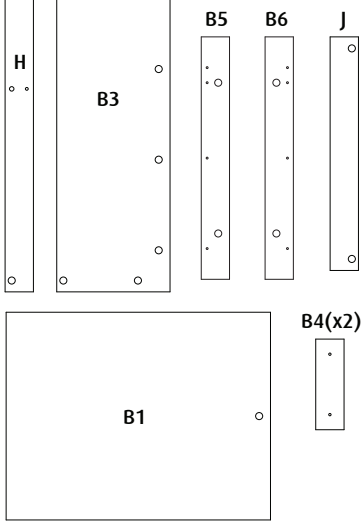

L1	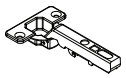	4
L2		
N		42
M		37
P		37
Q		37
S		2
T	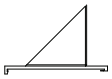	2
V1	ST4x16	24
V2	ST3.5x14	4
V3	ST5x35	13
V4	ST5x60	2
Y32-48		2
Y25		1
W1		12
ZP ZW ZB		10

		250 G2		300 G2	
Label	**Part Description**	**BLACK**	**WHITE**	**BLACK**	**WHITE**
A	Cabinet Bottom	5282G2		7782B	
B1	Cabinet Rear Middle	5284B-P		5284B-P	
B2	Cabinet Rear Top	5285G2		5285G2	
B3	Cabinet Rear Bottom	7786B		7786B	
B4	Cabinet rear base support	6620		6620	
B5	Cabinet Side Top support Left	4904G2-L		7680LB-G2	
B6	Cabinet Side Top support Right	4904G2-R		7680RB-G2	
C	Cabinet Top (Located under the glass tank)	4905G2		7781B	
D	Cabinet Door	5265B	5265W	5265B	5265W
E	Cabinet Front Upper PLY	5288B-P		5288B-P	
F	Cabinet Side Left	4902G2-B	4902G2-WB	7681B-G2	7681WB-G2
G	Cabinet Side Right	4903G2-B	4903G2-WB	7677B-G2	7677WB-G2
H	Cabinet Sockel	7783B	7783WB	7783B	7783WB
J	Cabinet Base Support	5287A-B		7787B	

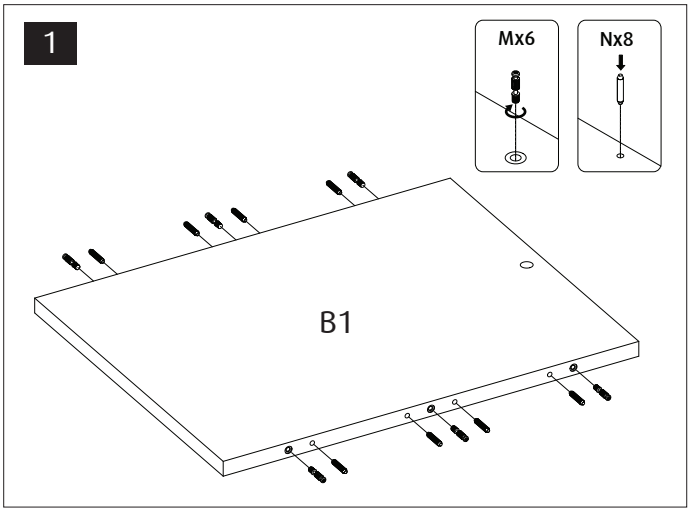
1
Mx6
Nx8
B1

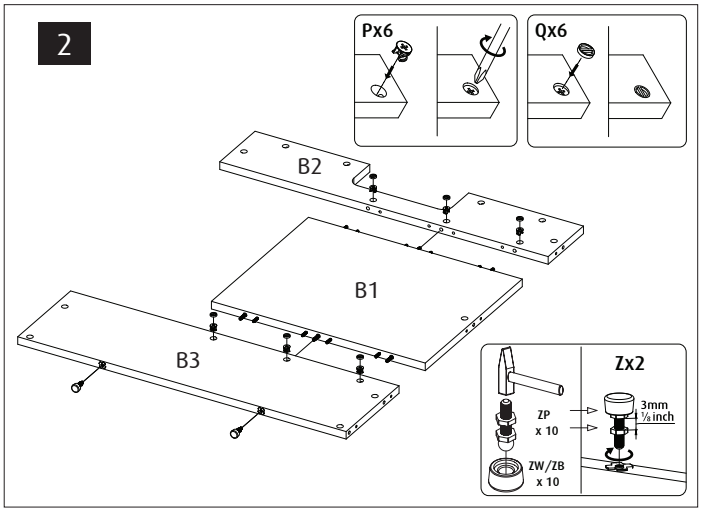
2
Px6
Qx6
B2
B1
B3
Zx2
ZP
x 10
3mm
1/8 inch
ZW/ZB
x 10

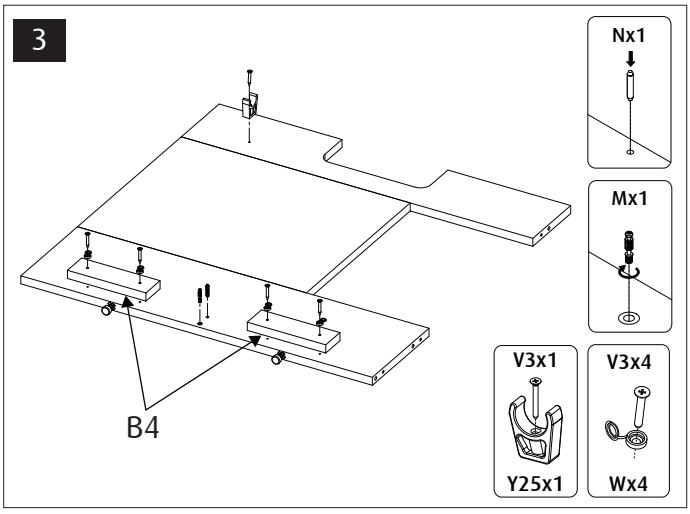
3
Nx1
Mx1
V3x1
Y25x1
V3x4
Wx4
B4

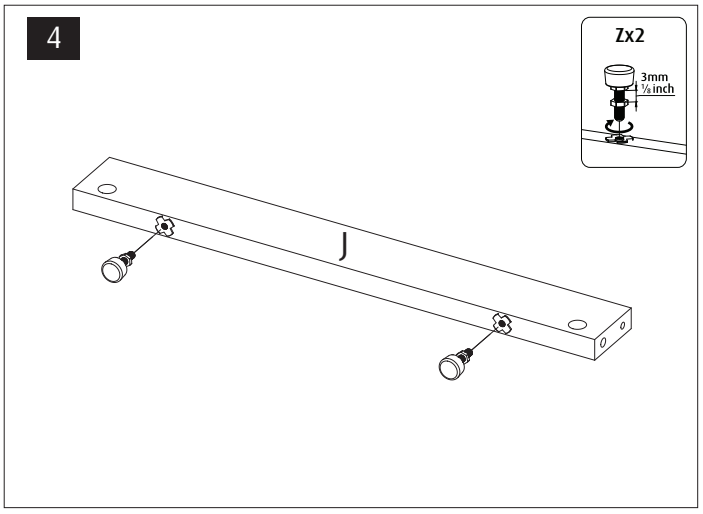
4
Zx2
3mm
1/8 inch
J

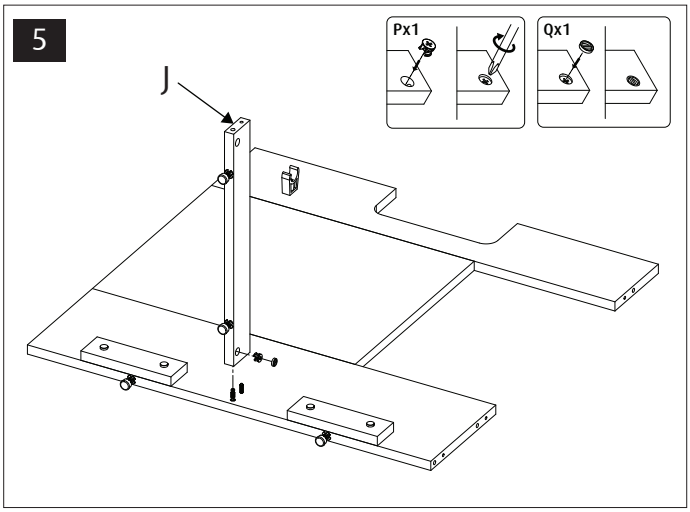
5
Px1
Qx1
J

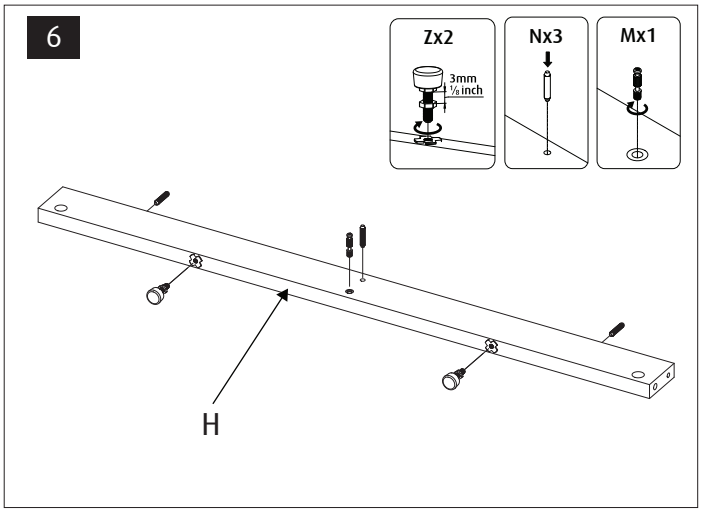
6
Zx2
3mm
1/8 inch
Nx3
Mx1
H

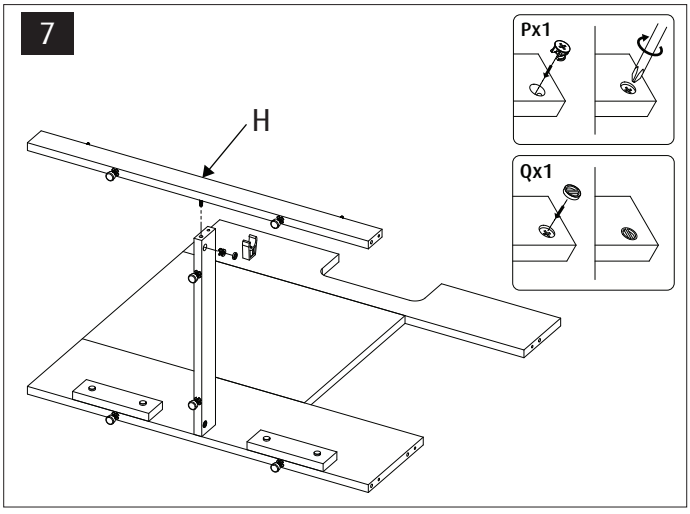
7
Px1
Qx1
H

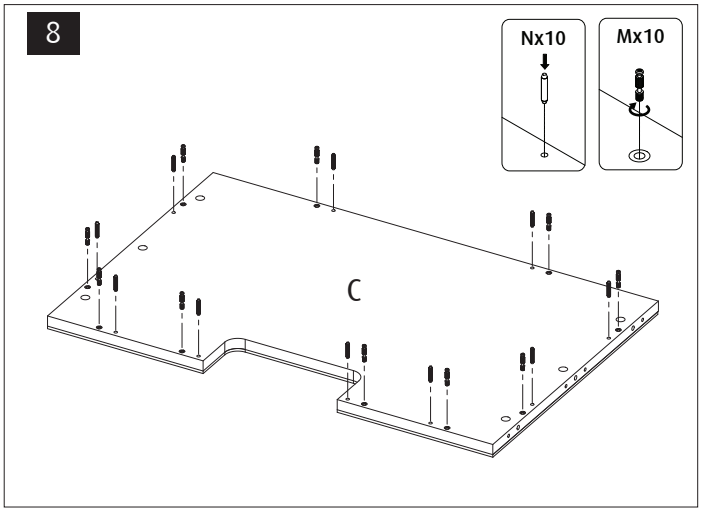
8
Nx10
Mx10
C

9

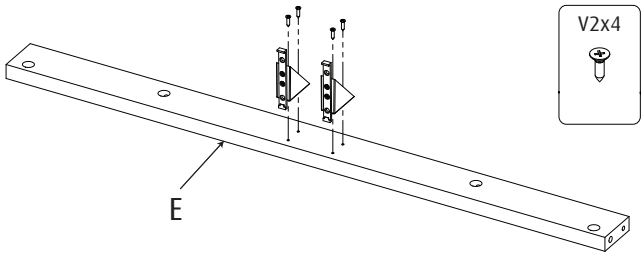

Tx2

V2x4

10

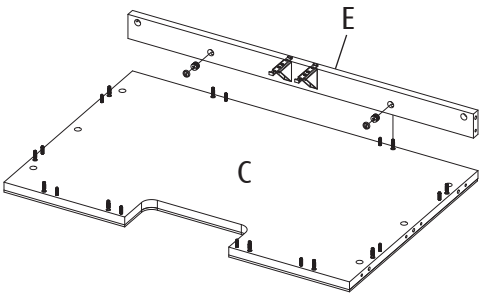

Px2

Qx2

11

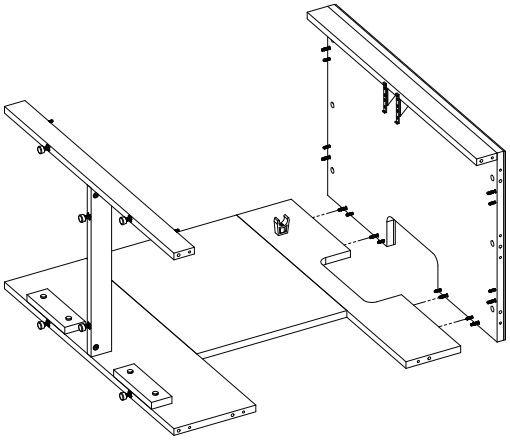

12

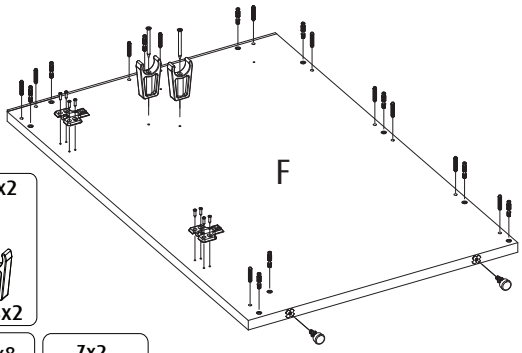

Nx11

V4x2

Y48x2

Mx10

V1x8

L2x2

Zx2

6mm
15/64 inch

13

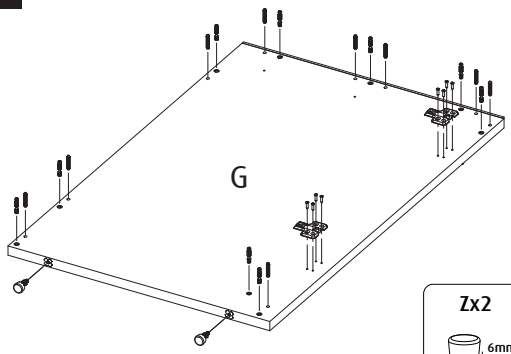

Nx9

Mx9

Zx2

6mm
15/64 inch

V1x8

L2x2

14

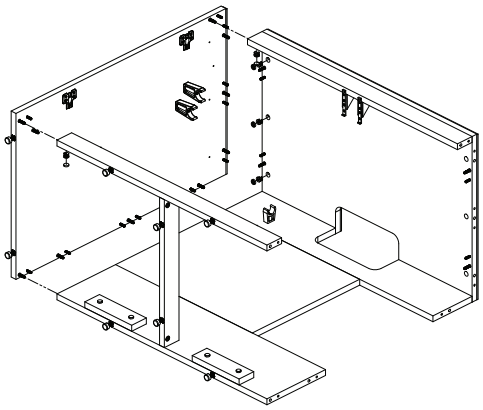

Px5

Qx5

15

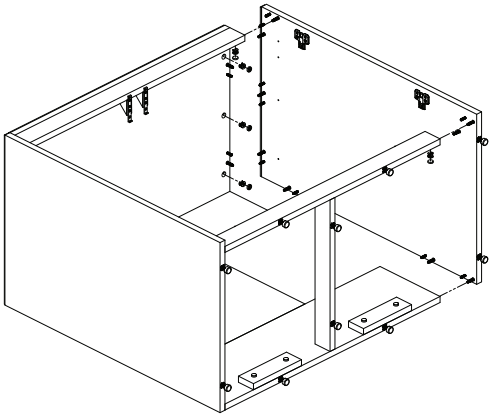

Px5

Qx5

16

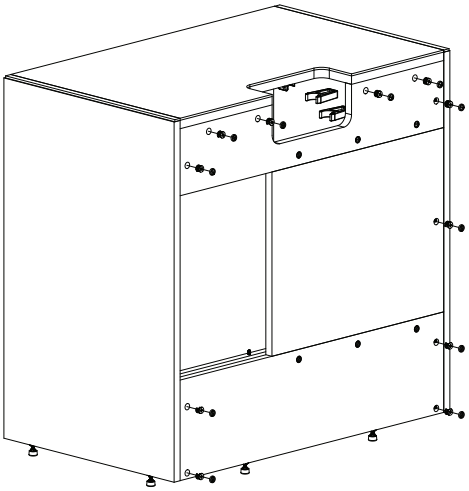

Px11

Qx11

17

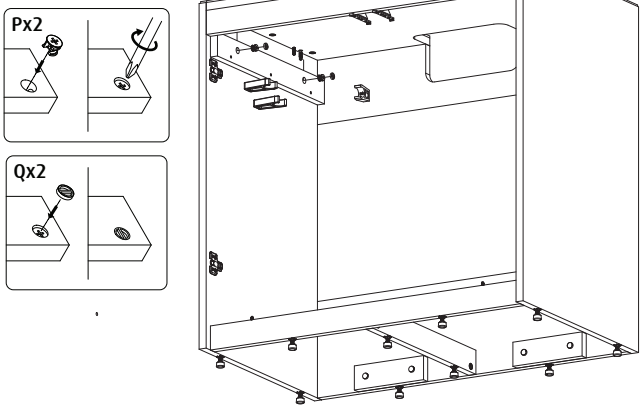

18

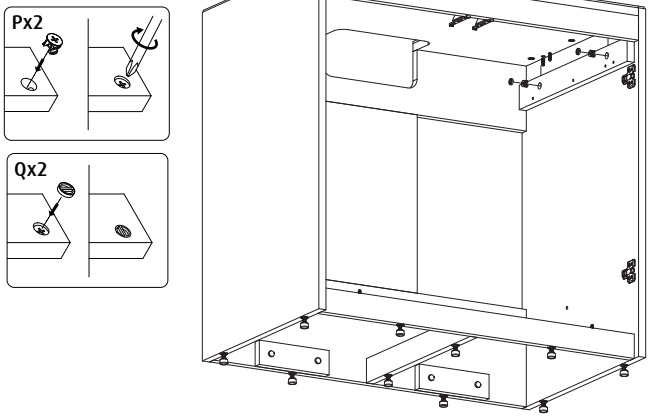

19

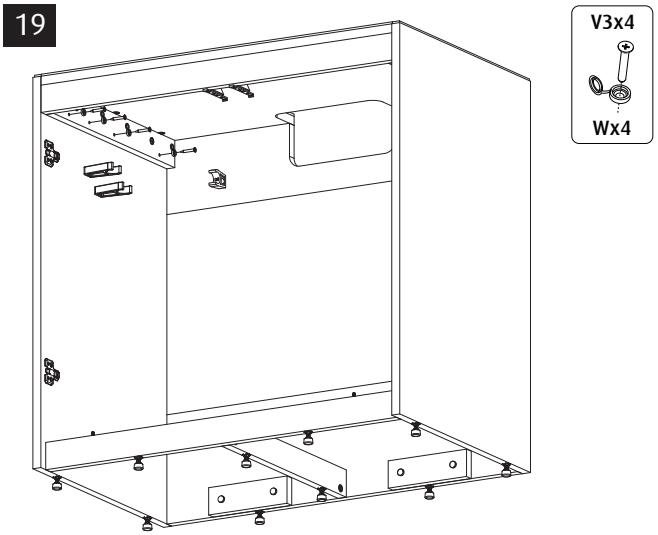

20

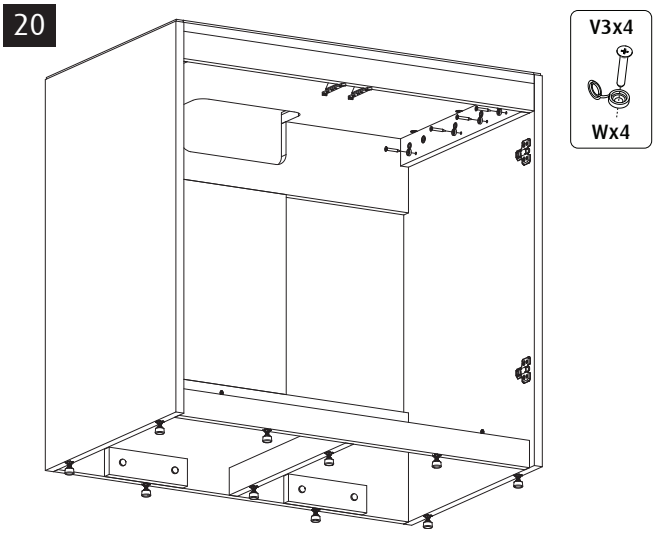

21

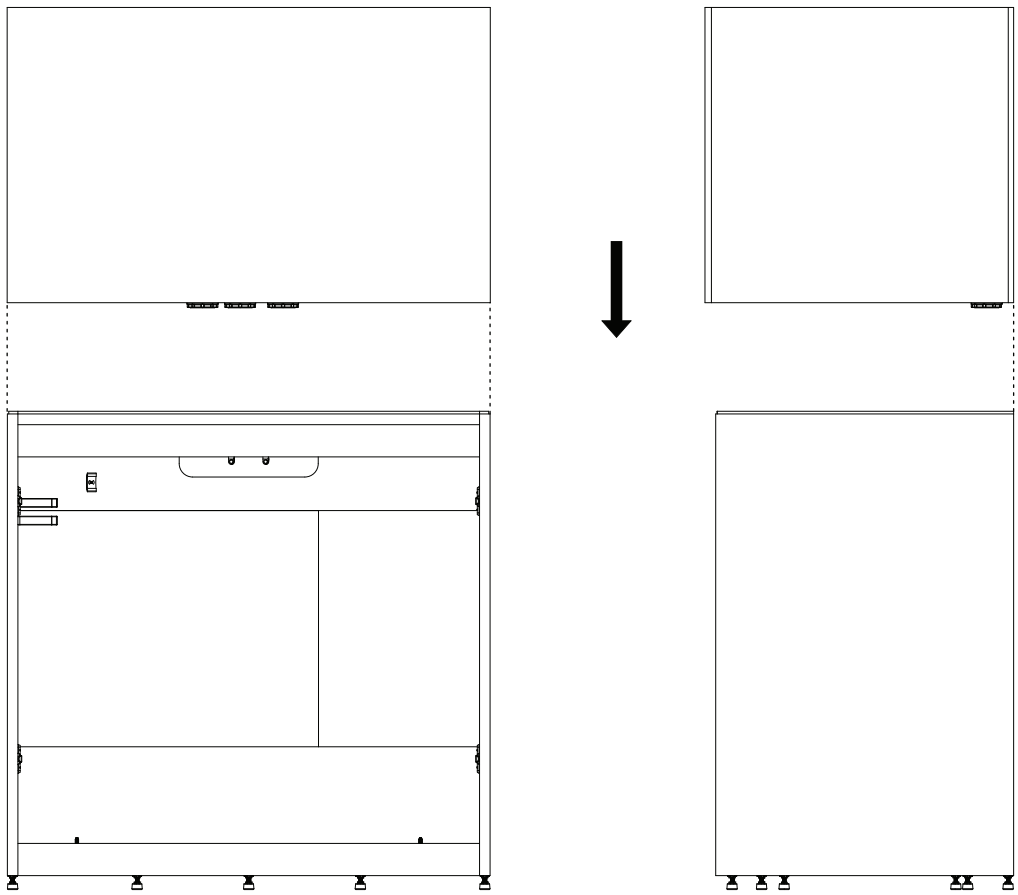

22 A

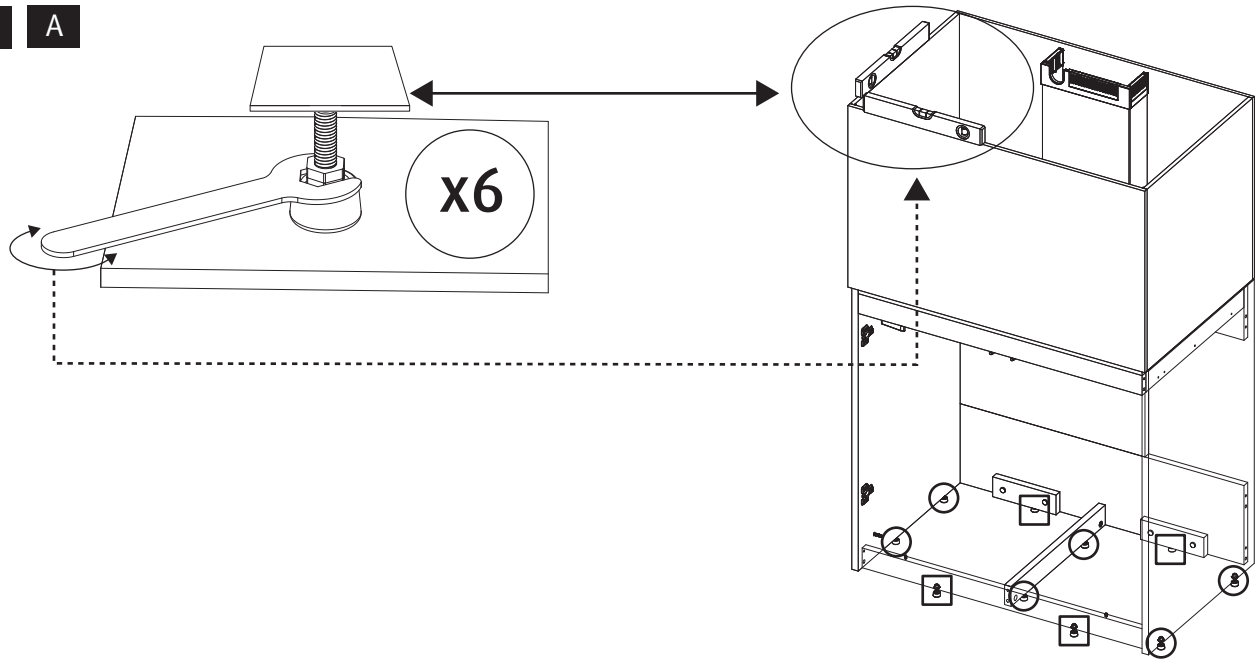

B

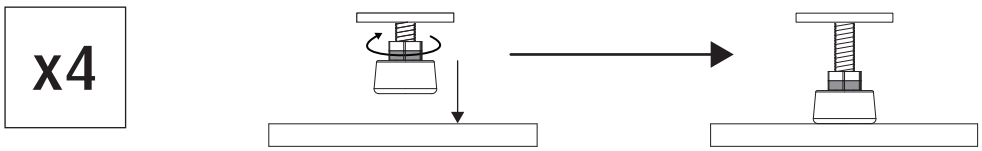

C

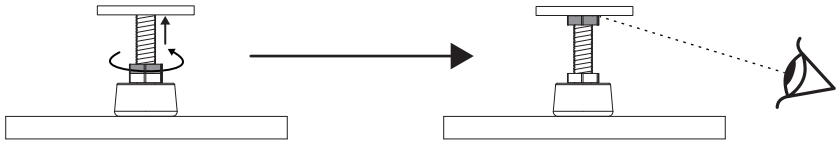

23

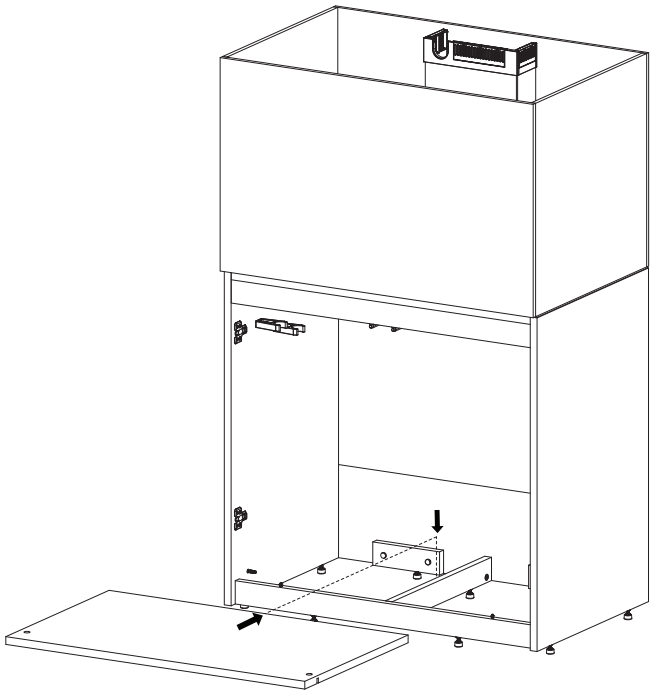

24

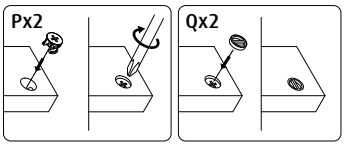

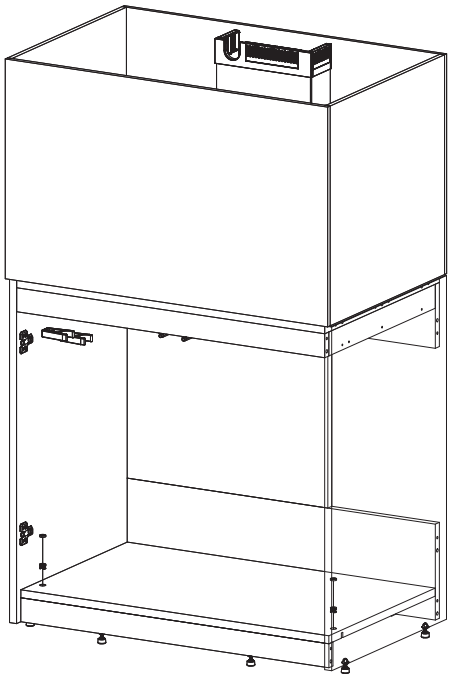

25

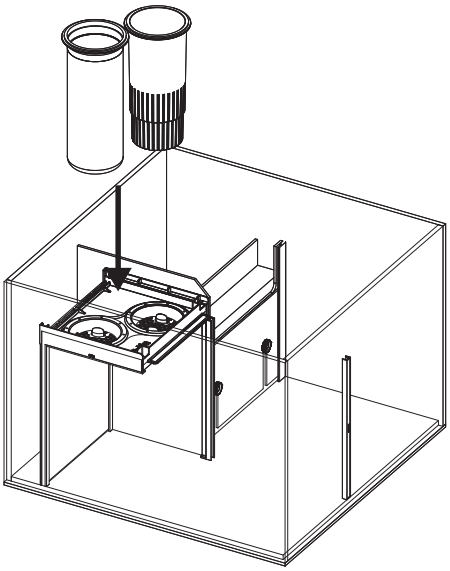

26

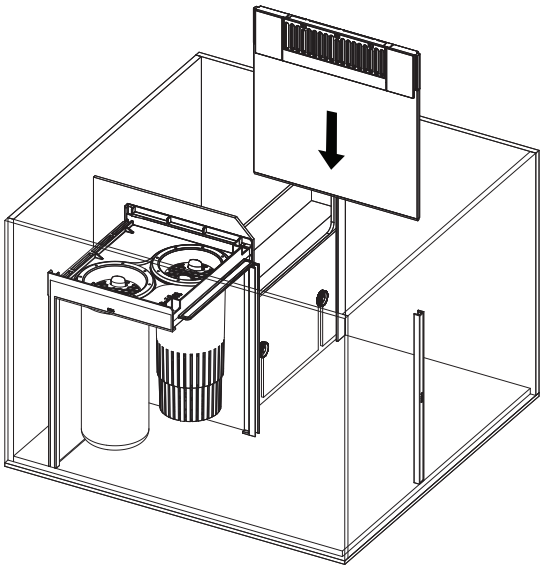

27

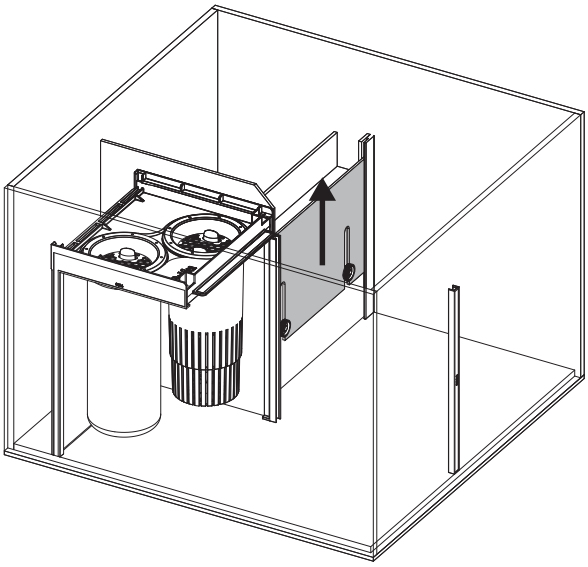

28

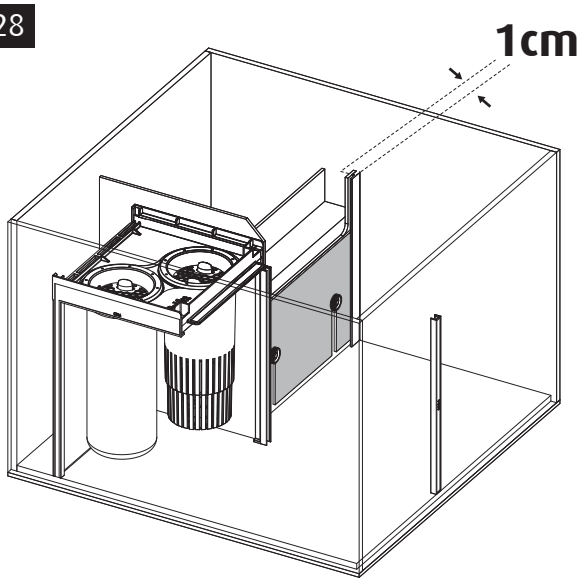

29

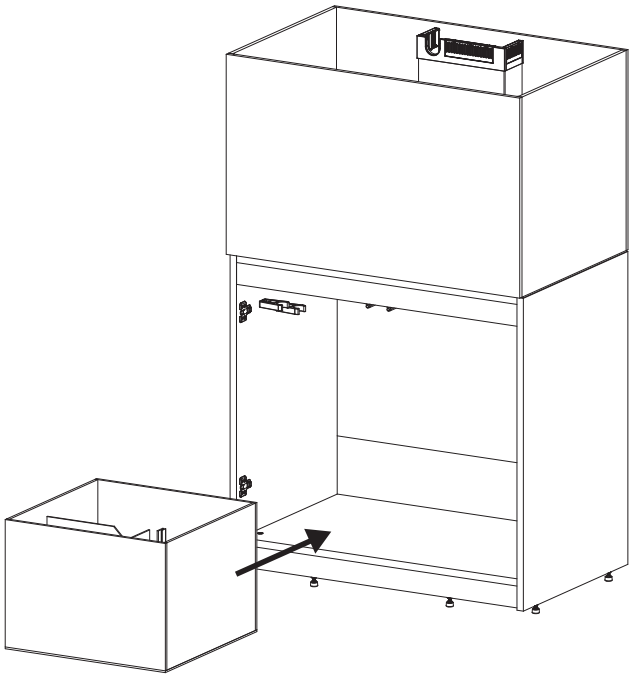

30

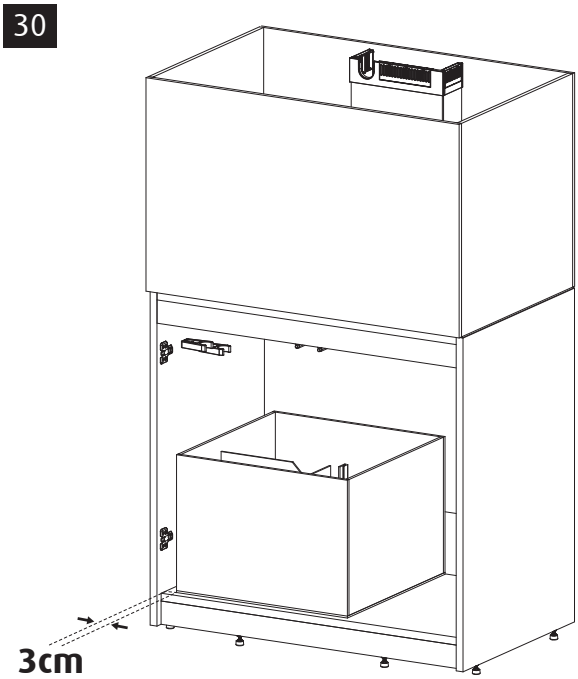

31

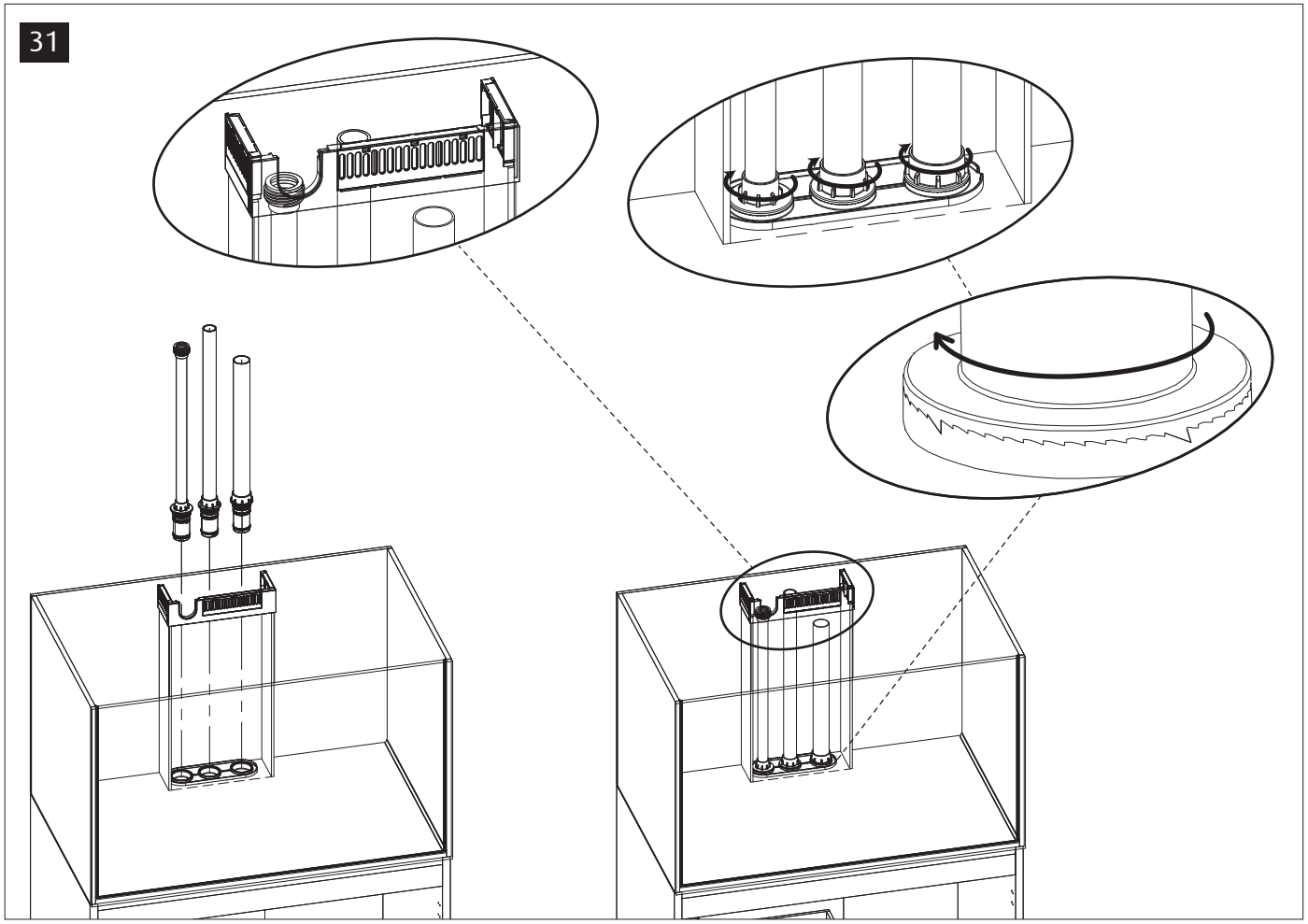

32

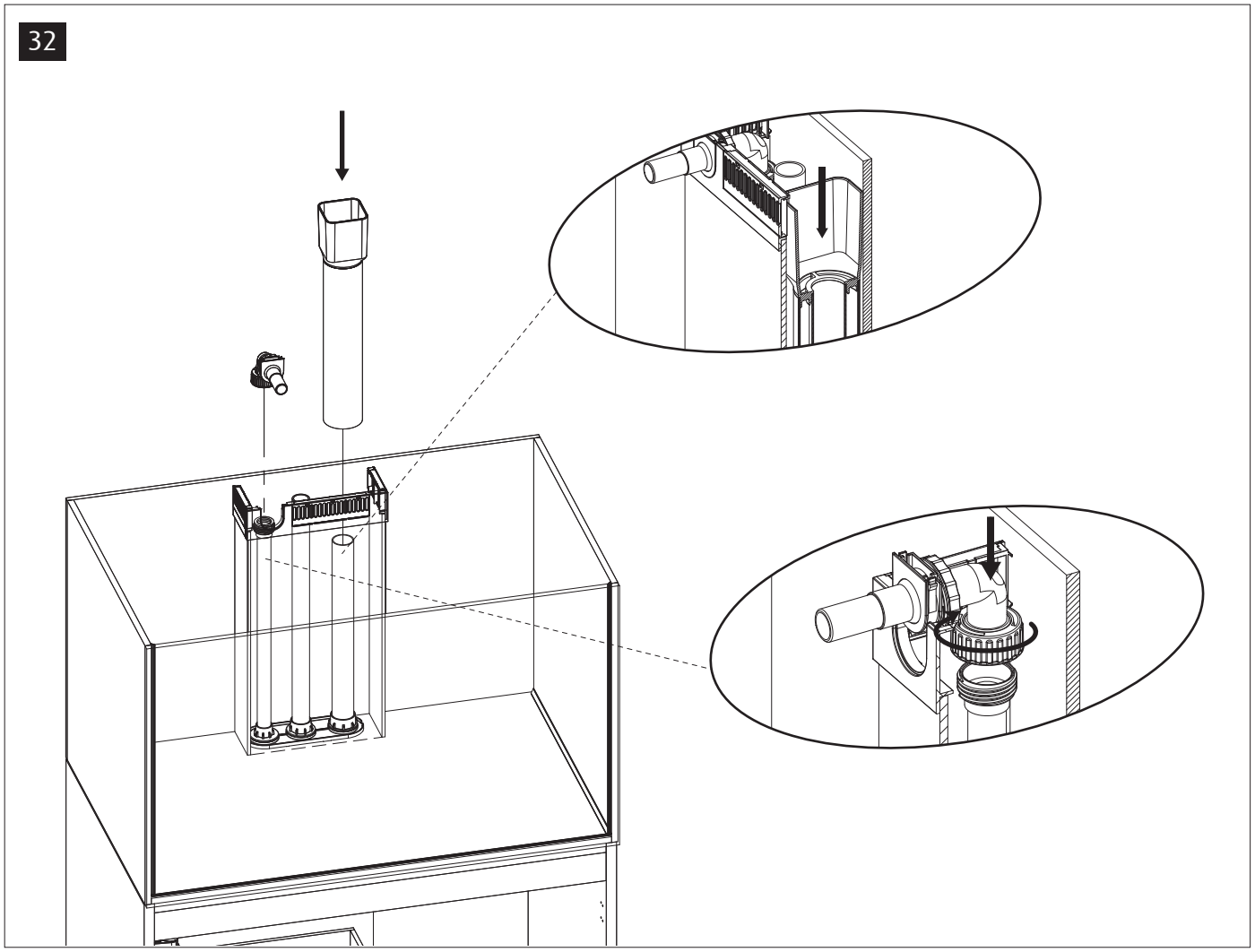

33

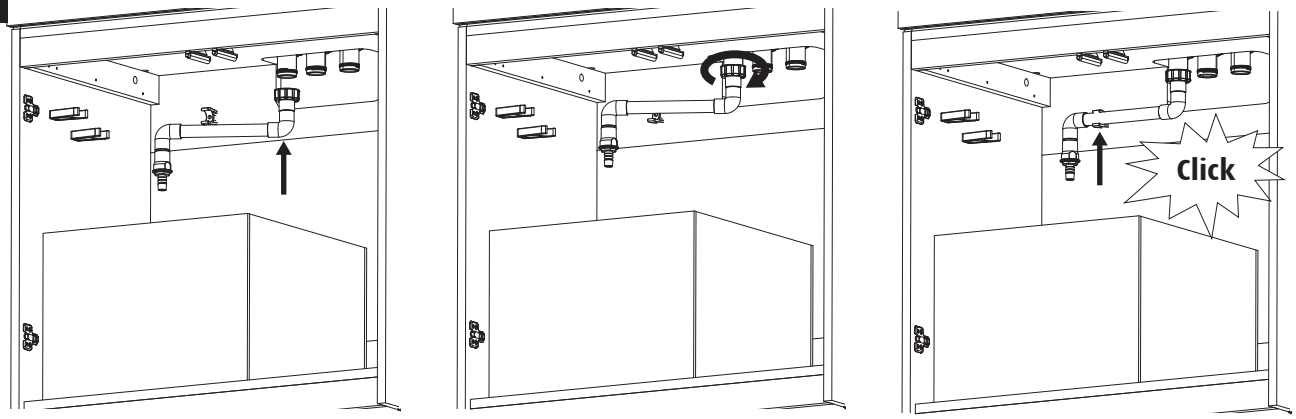

34

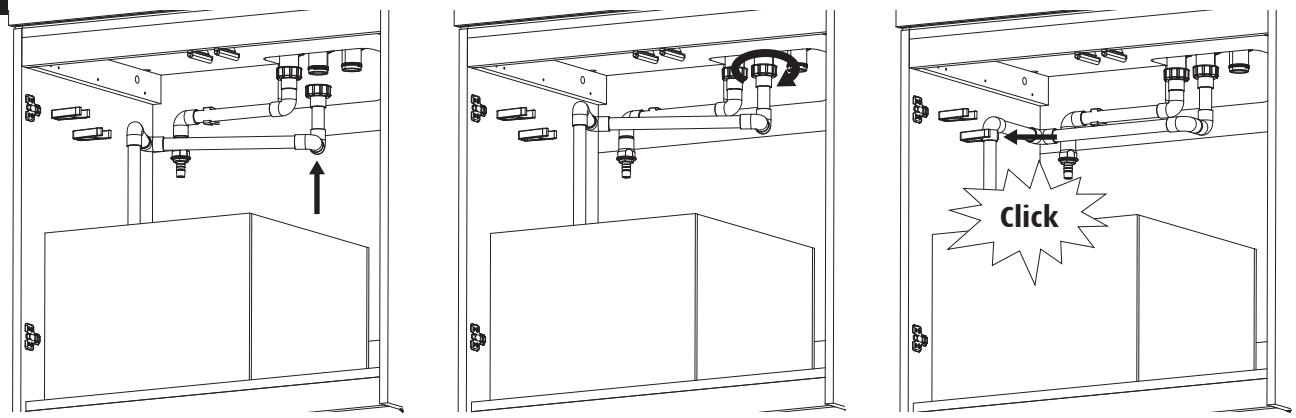

35

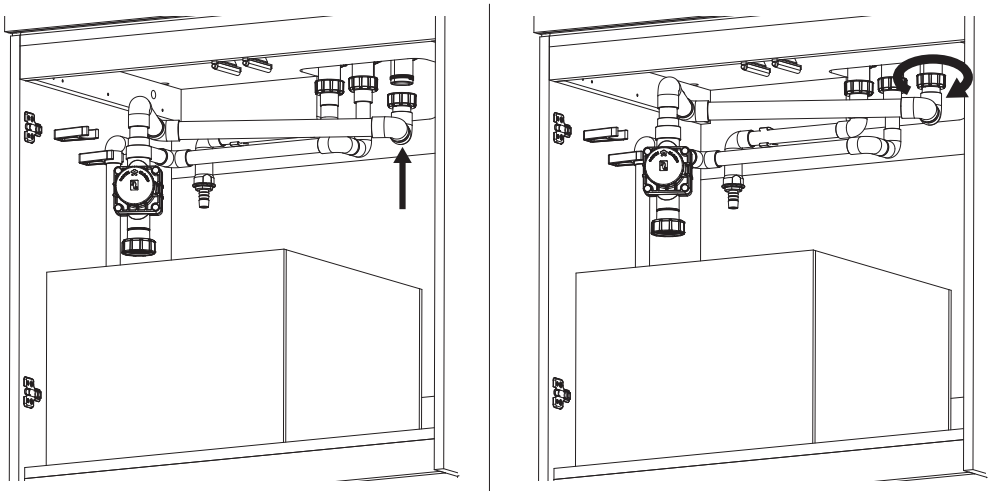

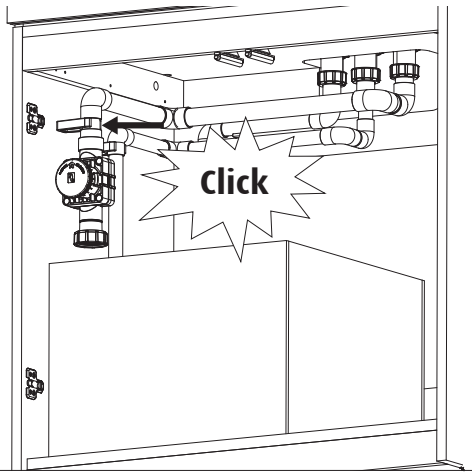

36

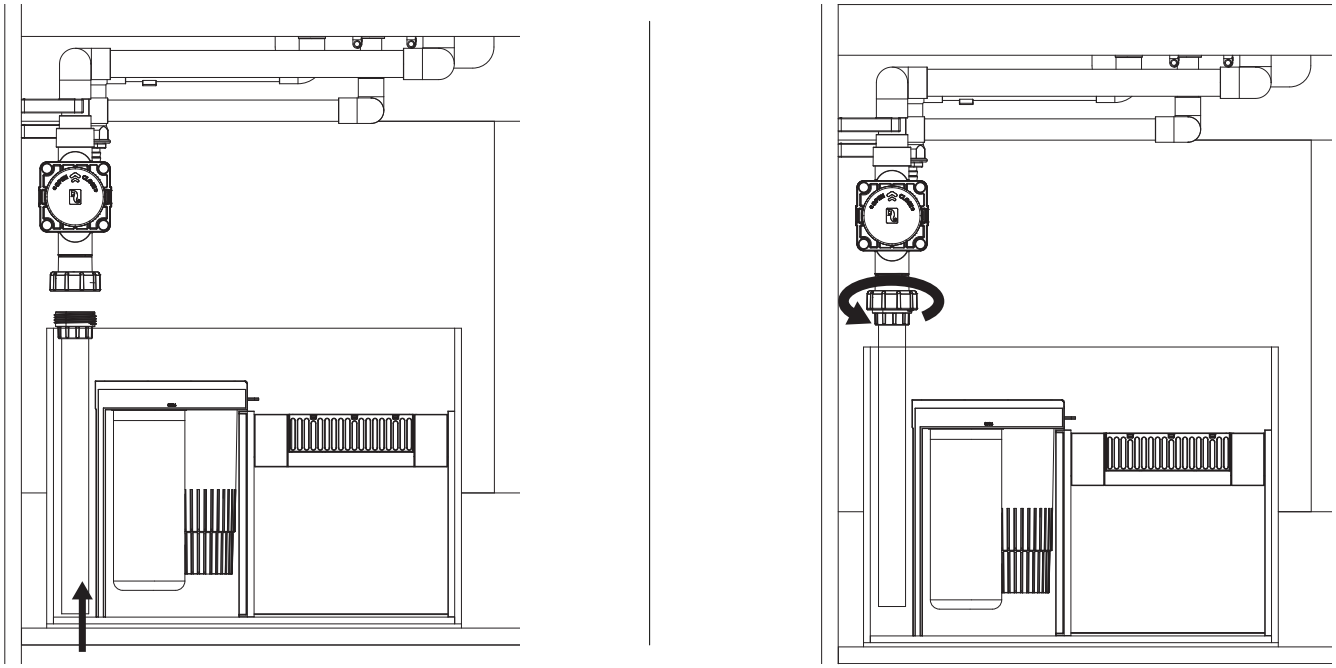

37

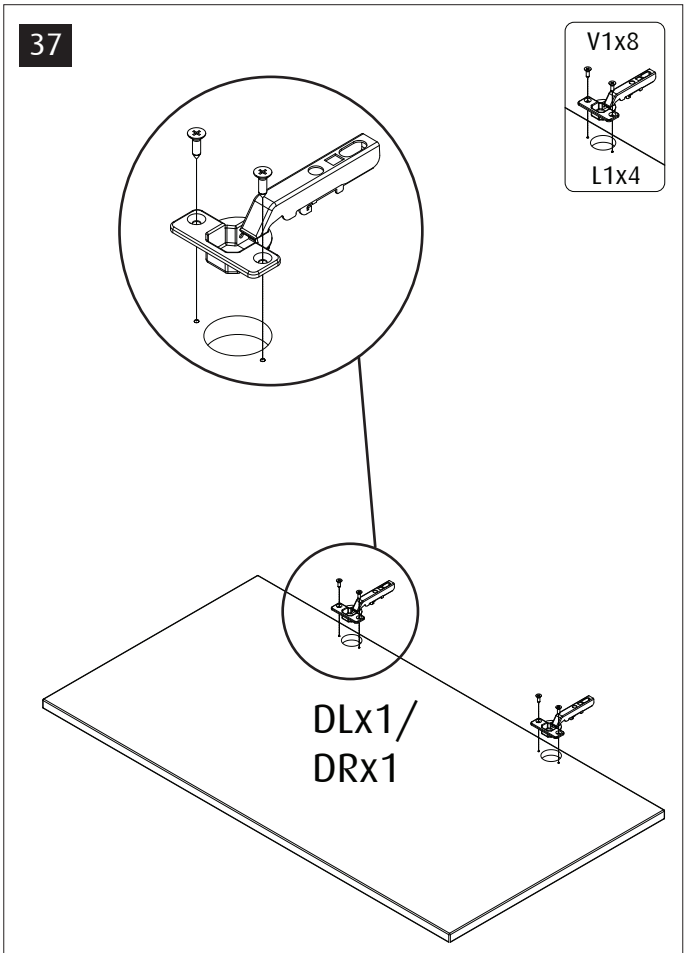

38

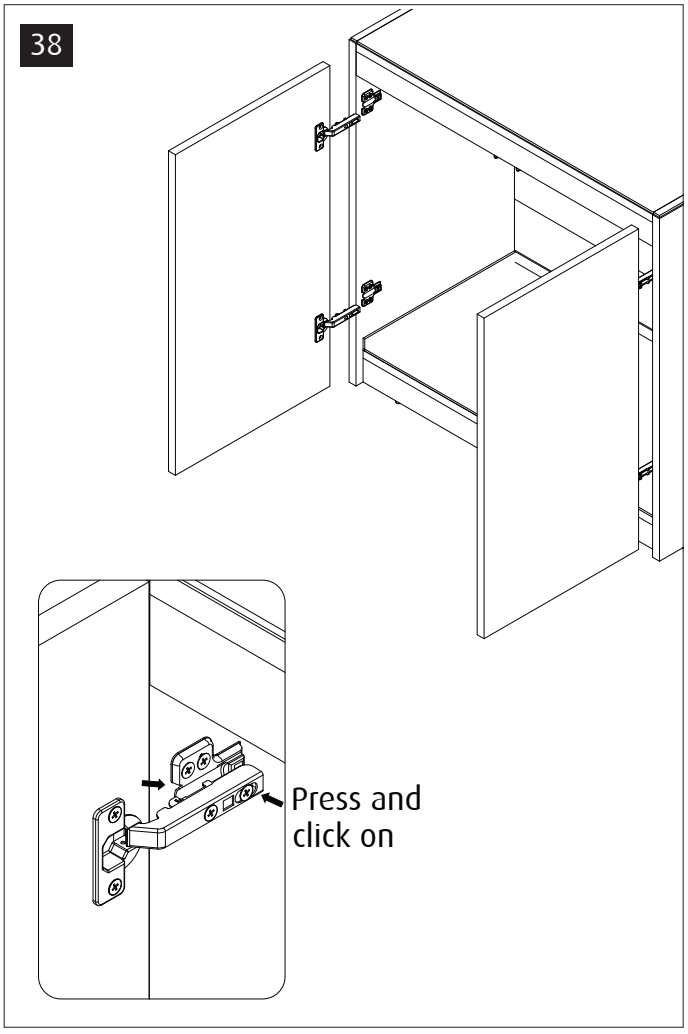

39

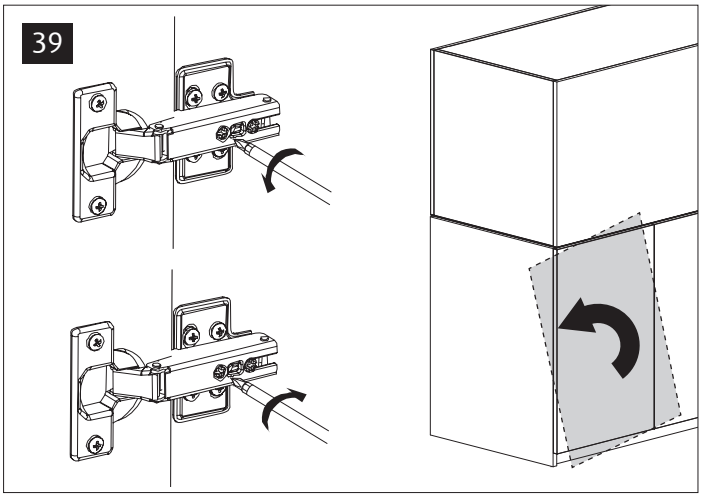

40

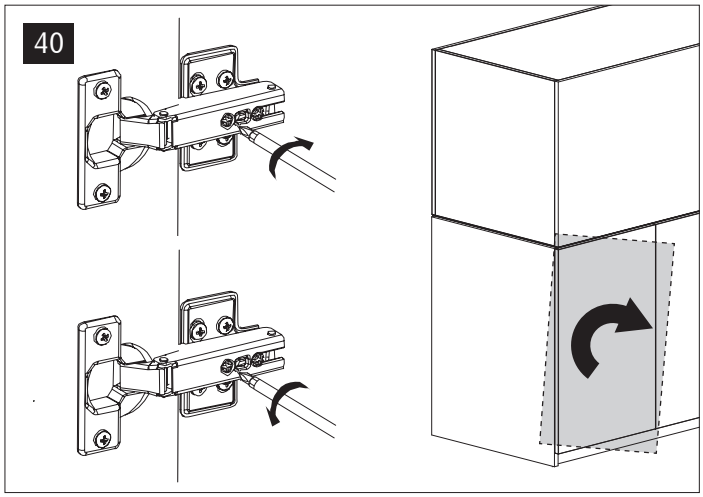

41

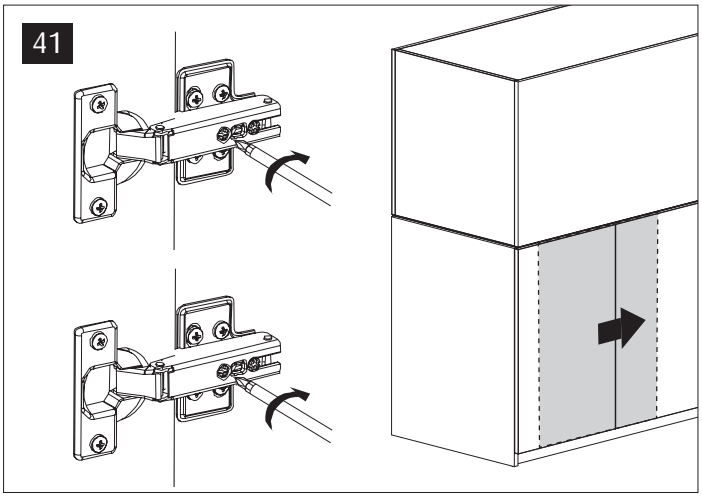

42

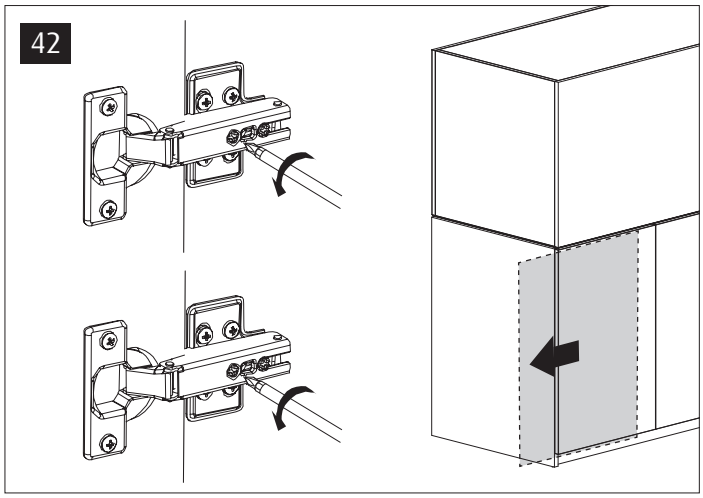

43

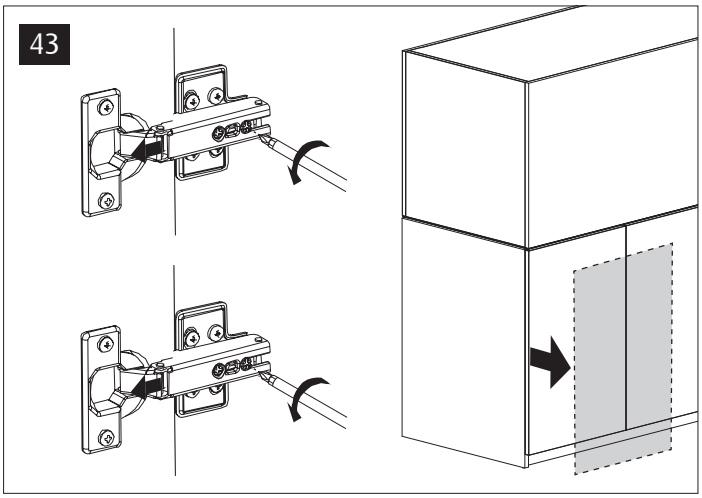

44

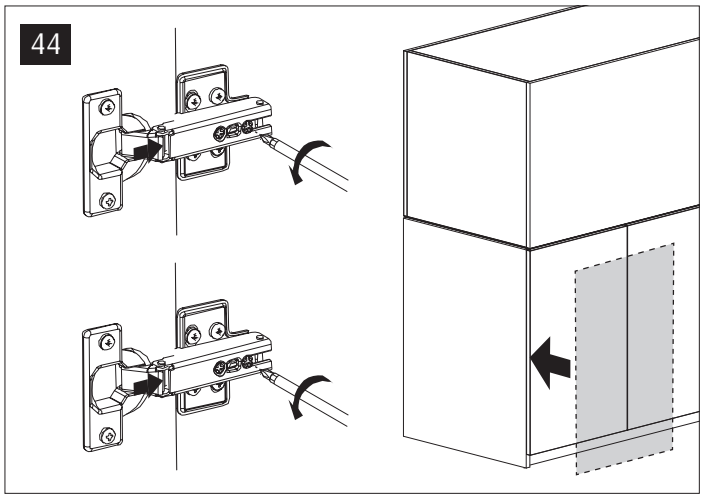

45

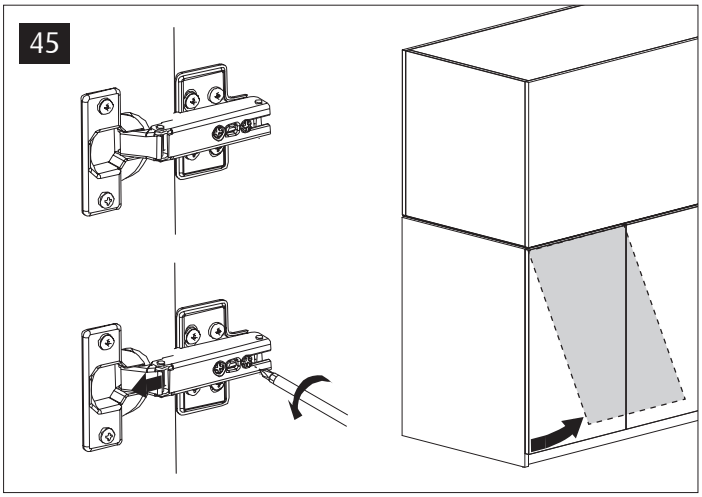

46

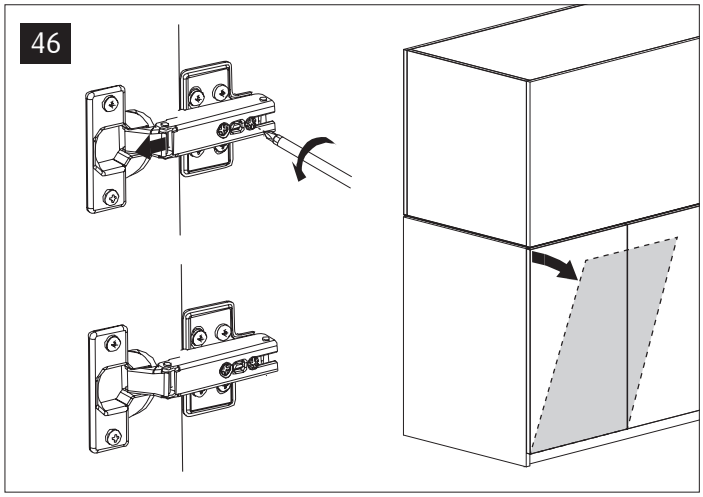

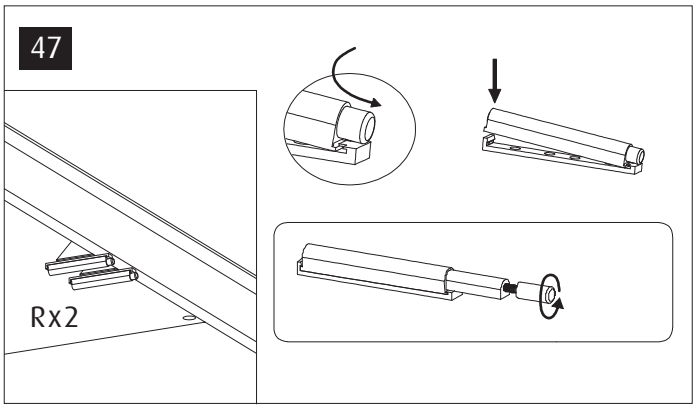

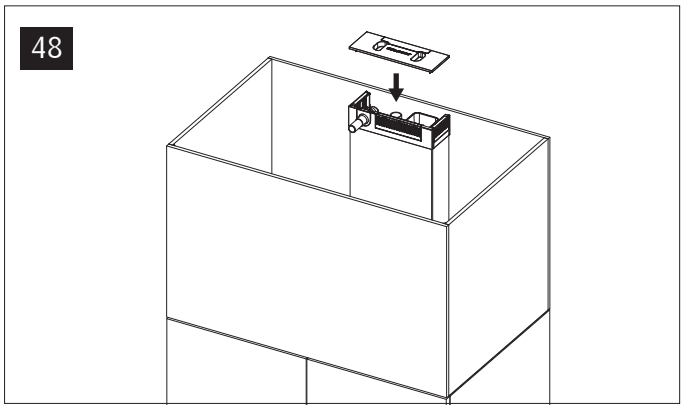

MAINTENANCE

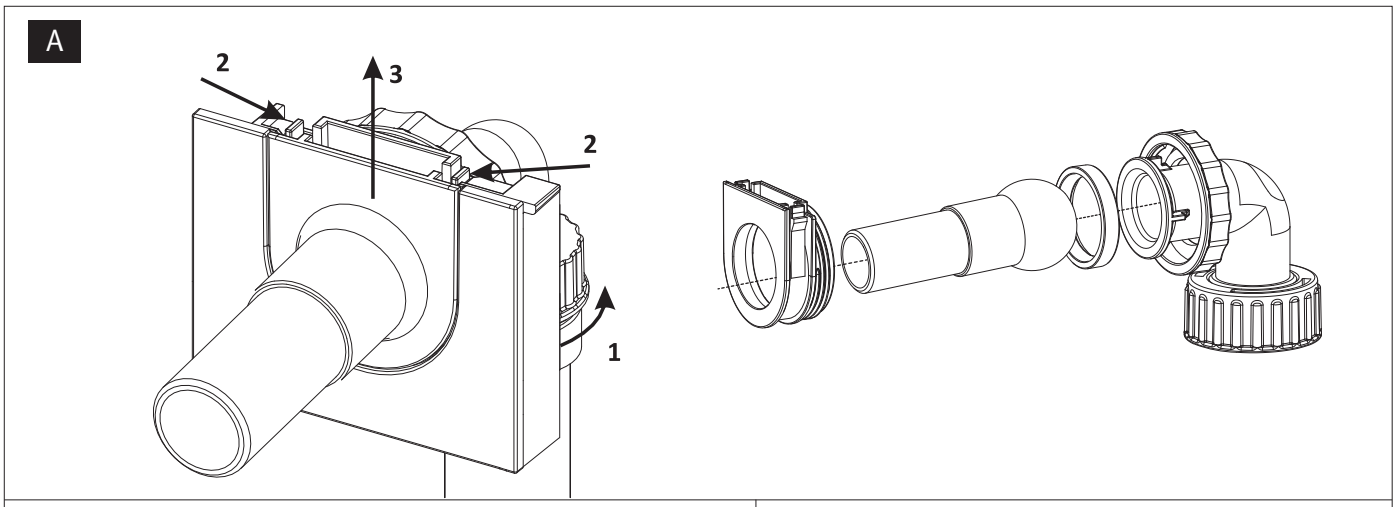

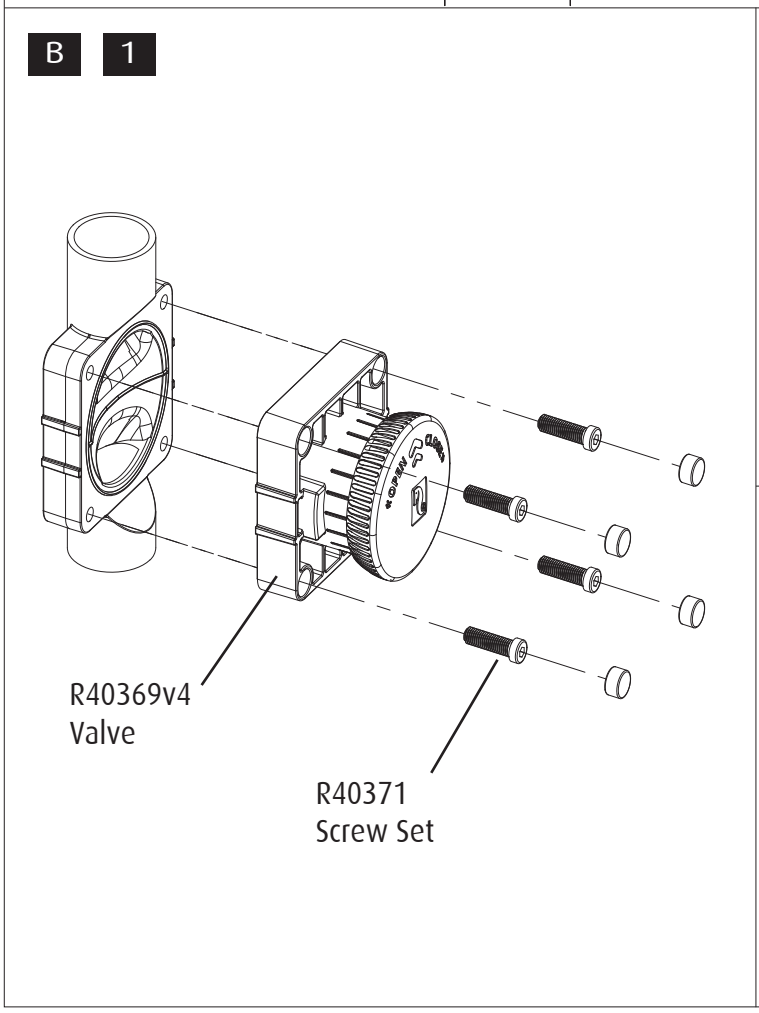

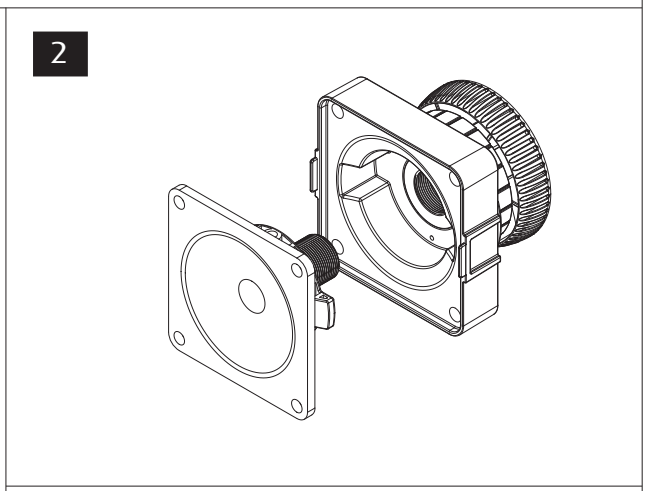

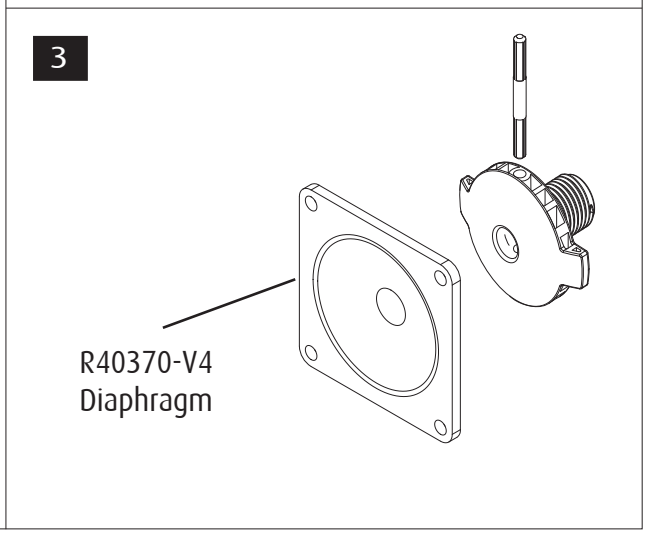

ReefMat®

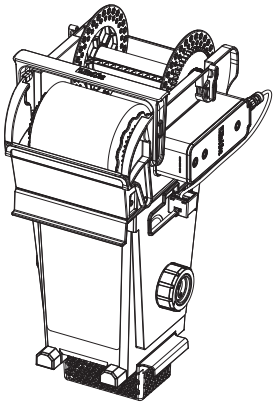

A

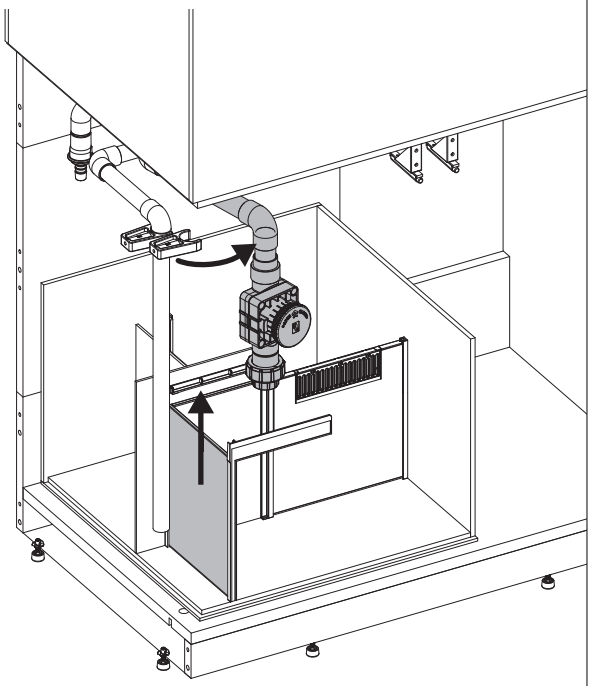

B

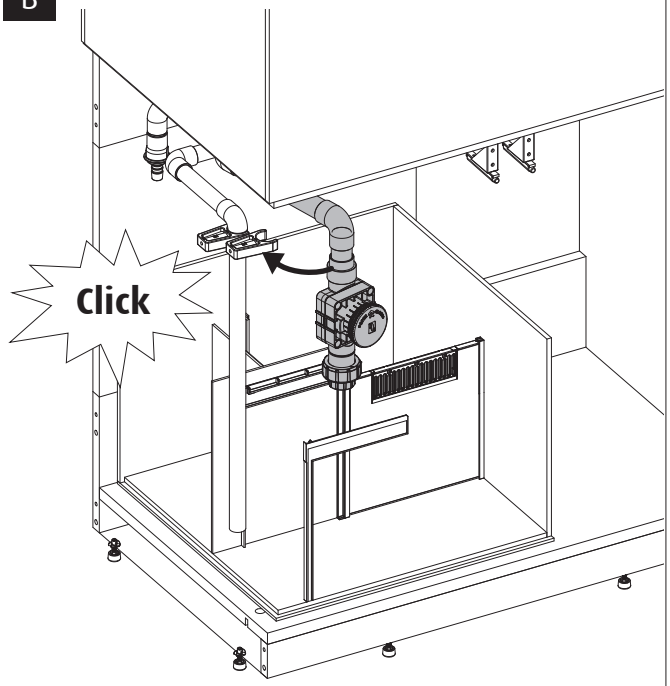

C

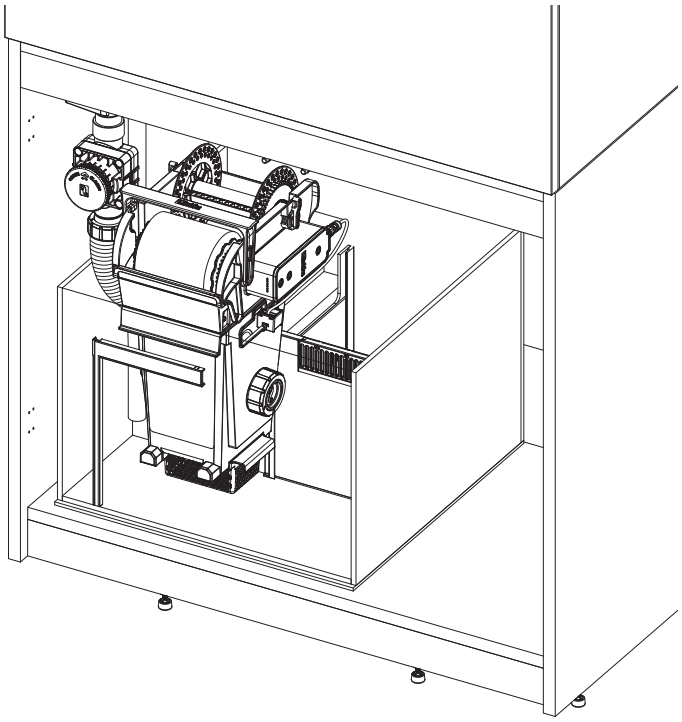

#775662P_REEFER 250+300 G2+ Cabinet & Aquarium Manual_V23E

Europe

Red Sea Europe
655 Rue des Frères Lumière
27130 Verneuil d'Avre et d'Iton,
France
support.fr@redseafish.com

UK & Ireland

Red Sea Aquatics (UK) Ltd
PO Box 1237
Cheddar, BS279AG
uk.info@redseafish.com

North America

Red Sea U.S.A & Canada
4687 World Houston Parkway
#200
Houston, TX 77032, U.S.A
support.usa@redseafish.com

Germany & Austria

Red Sea Deutschland
Büro Deutschland
Prinzenallee 7 (Prinzenpark)
40549 Düsseldorf
support.de@redseafish.com

China

Red Sea Aquatics (GZ) Ltd.
Block 2-4, No.168, West Yingbin
Road, Xinhua Industrial Park,
Huadu District, Guangzhou City,
China, Postal code 510812.
Tel: +86-020-6625 3828
info.china@redseafish.com

Red Sea

www.redseafish.com