NanoMat

Automatic – Plug & Play – Efficient

User Manual

ENG

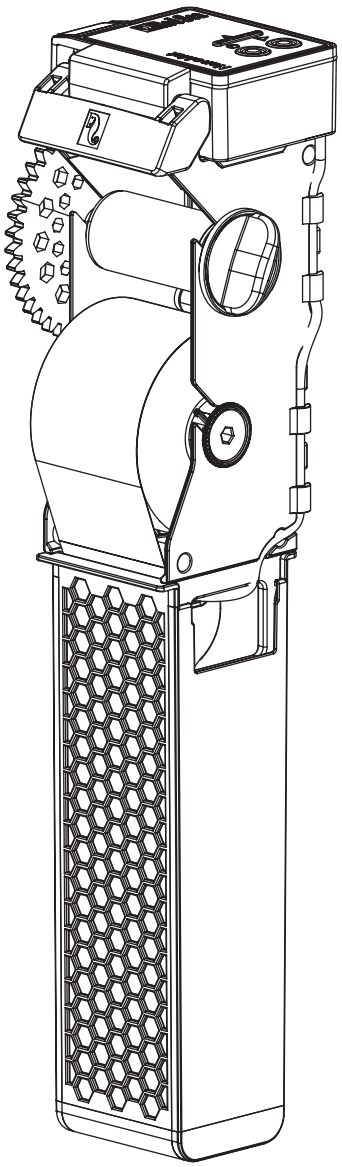

Resource & Support Center:
www.redseafish.com/support/

Red Sea

Contents

Introduction 3
Safety 3
Components 4
Overview 5
Features of the NanoMat Fleece-Mat roller filter 5
Benefits of roller filters over static mechanical filters 5
Drive unit Control functions – Indicator LEDs & Buttons 6
Preparations before installation of the NanoMat 7
Assembly of the Drive-unit & Sensor 8
Inserting a new Fleece-Mat Roll 9
Installation of the NanoMat 10
Operation 12
Device Maintenance 13
Test Mode 13
Troubleshooting 14
Warranty 14

Introduction

Congratulations on your purchase of Red Sea's NanoMat.

The NanoMat is a plug & play, fully automated, smart fleece roller filter that keeps your aquarium water crystal clear for weeks at a time.

NanoMat is designed as a drop-in replacement for Red Sea & standard 4" filter socks and for the rear sump of the Max Nano G2 all-in-one systems.

The NanoMat is not App controlled and does not require an internet connection.

Sincerely,

The Red Sea Team

Safety

PLEASE READ AND FOLLOW ALL SAFETY INSTRUCTIONS

This device is intended for household and indoor use only.

DANGER: To avoid possible electric shock, special care should be taken when handling a wet aquarium. For each of the following situations, do not attempt repairs yourself; return the appliance to an authorized service facility for service or discard the appliance.

WARNING: To guard against injury, basic safety precautions should be observed, including the following:

Do not operate any appliance if it has a damaged cord or plug, if it is malfunctioning, or if it is dropped or damaged in any manner.

This appliance can be used by children aged from 8 years and above and persons with
reduced physical, sensory or mental capabilities or lack of experience and knowledge if they
have been given supervision or instruction concerning use of the appliance in a safe way and
understand the hazards involved. Children shall not play with the appliance. Cleaning and user maintenance shall not be made by children without supervision.

The appliance is only to be used with the power supply unit provided with the appliance.

Close supervision is necessary when any appliance is used by or near children.

To avoid injury, do not contact moving parts.

Always unplug an appliance from an outlet when not in use, before putting on or taking off parts, and before cleaning. Never pull the cord itself to remove the plug from the outlet. Grasp the plug and pull to disconnect.

Do not use an appliance for anything other than its intended use. The use of attachments not recommended or sold by the appliance manufacturer may cause unsafe conditions.

Do not install or store the appliance where it will be exposed to the weather or to temperatures below freezing point.

Make sure an appliance is securely installed before operating it.

Read and observe all the important notices on the appliance.

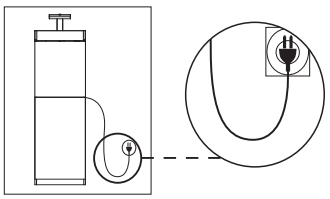

Figure 1: Drip Loop

Note:

A cord rated for less amperes or watts than the appliance rating may overheat. Care should be taken to arrange the cord so that it cannot be tripped over or pulled accidentally.

Do not use if cord is damaged. In case of need, do not attempt to replace or repair yourself; return the appliance to an authorized service facility for service or discard the appliance.

Rating info:

Operating Temperature: 5 to 45°C
Relative Humidity: 15~85%RH
Supply voltage: 100-240V 50/60Hz
Rating: 1A, @10W Max.
Operating Voltage 12 Vdc
Operating Frequency: 2402 - 2480 MHz
Max. Power: 32.43 mW

NanoMat Components

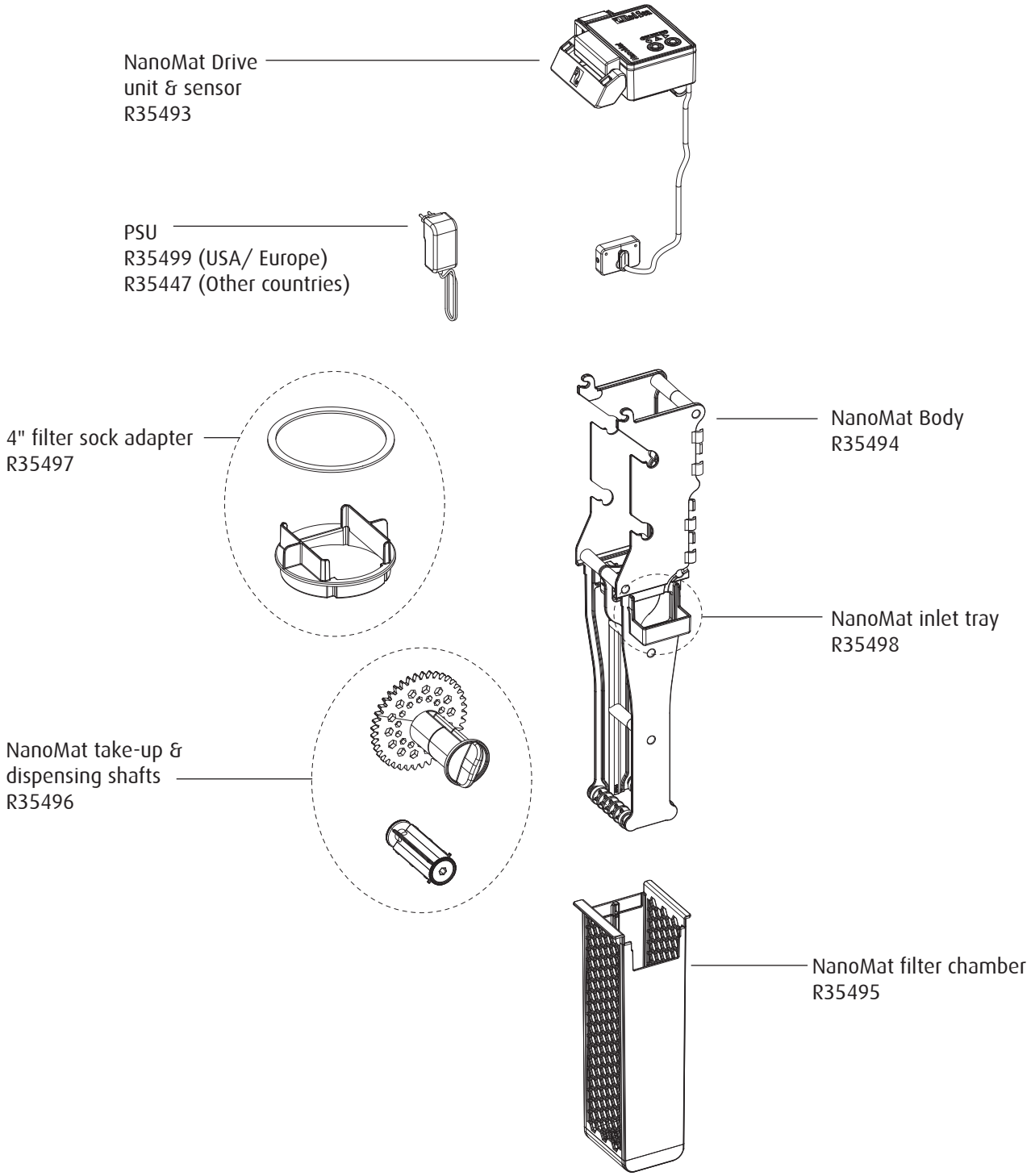

Overview

The NanoMat is a mechanical filter that removes particulate matter from aquarium water by passing the water through a fleece filter material (Fleece-Mat) that physically traps the particles that are larger than the mesh of the filter material.

The NanoMat is designed to be in the rear sump of Red Sea MaxNano G2 range of all-in-one aquariums or to replace 4" filter sock inside the sump under an aquarium

The fleece-mat is supplied in the form of a continuous roll that passes against the flow grids on 2 sides and bottom of the filter chamber. When the fleece-mat is new the water level inside the chamber will be at the same level as the water surrounding it. As the fleece-mat traps more and more waste particles, the water level inside the filter chamber slowly rises.

A water level sensor that is located near the top of the filter body detects the rising water level and at a predefined point will trigger an automatic advancement of the fleece-mat thereby reducing the water level inside the unit. This process continues automatically for the full length of the roll until it needs to be replaced.

Features of the NanoMat Fleece-Mat roller filter

The NanoMat features a smart processor-controlled drive unit with a fail-proof, solid-state, dual level sensor (mat-advance & high-water) mounted at the top of the filter chamber.

The mat-advance sensor is for the regular operation of the NanoMat and automatically advances the roll whenever the fleece gets blocked.

The high-water sensor located 1cm (0.4") above the mat advance sensor will temporarily suspend the auto-advance if there is a high-water level in the sump (such as when the main return pump is off) and prevent continuous dispensing of new fleece-mat. The auto-advance will resume once the high-water level condition ends.

As an additional protection against wasted fleece or damage to the motor, the processor automatically suspends the auto-advance if 5 consecutive auto-advances fail to lower the internal water level. This can occur if the mat gets jammed, when the fleece ends or if the water level in the sump is at the same level as the main sensor. Any of these conditions will require user intervention to correct the situation and resume the normal auto-advance function.

The indicator LEDs on the drive-unit show when the unit is running normally, when the auto-advance has been temporarily suspended or when user intervention is required.

Benefits of roller filters over static mechanical filters

Static mechanical filters such as micron socks, floss, pads etc. do a good job of trapping filter particles. However, until these static filters are removed and washed, the trapped particles remain in the water and gradually decompose, adding nutrients (nitrate and phosphate) to the system. Using a correctly rated roller filter will physically remove all collected particles within about a day, significantly reducing their decomposition. Due to the efficiency of the NanoMat, you may well notice a drop in nutrient levels shortly after it is added to an established aquarium.

Drive unit Control functions – Indicator LEDs & Buttons

Power LED Indicator:

- Solid Red light – DC power is available.
- No Red light – DC power is not available.

Auto-advance LED Indicator:

- Solid Red light – Auto-advance is enabled.
- No Red light – Auto-advance is disabled.

Status LED Indicator:

- No Red light – NanoMat is operating normally.
- Blinking Red light – indicates that the Auto-advance is temporarily suspended due to "High-water condition" and will automatically resume once the water level returns to normal.

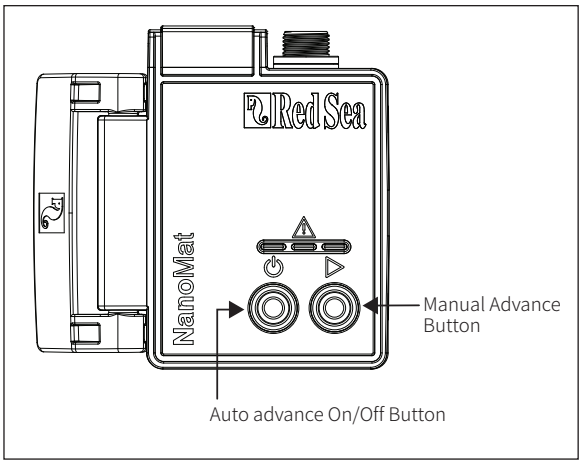

Auto-advance & Status LED Indicators blinking alternately

Auto-advance is suspended, and user intervention is required to resume regular operation. (Pressing the Auto-advance button will re-enable the auto-advance function.)

Auto-Advance On/Off Button

If Auto-advance LED is off: Pressing button enables the Auto-advance mode.

If Auto-advance LED is on: Pressing button disables the Auto-advance mode.

If Auto-advance & Status LEDs are blinking alternately: Pressing button re-enables the Auto-advance mode.

Manual Advance Button

Pressing the manual advance button will rotate the take-up roll, pulling new material from the dispensing roll. This button is always active and can be used when trying to free a jammed mat.

Test Mode

Pressing the manual advance & Auto-advance buttons simultaneously for 6 seconds will put the drive-unit into "Test mode" and suspend the normal operation.

Pressing the Auto-advance button will return the drive-unit to normal operation.

See details of Test Mode below.

Preparations before installation of the NanoMat

Familiarize yourself with the assembly of the NanoMat by removing the take-up and dispensing shafts from the body and sliding the body out of the filter chamber. Note the 2 halves of the take-up shaft for easy removal of the used fleece.

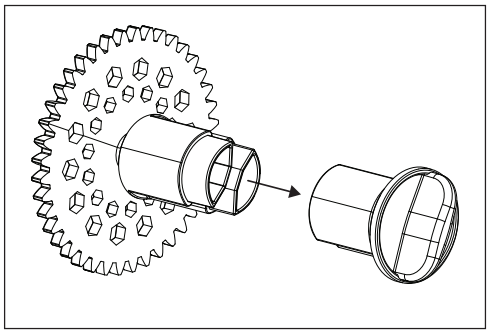

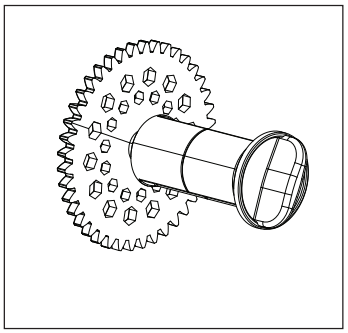

Note the protrusion on one of the external sides of the body and the slot on the inside of the chamber. This is to ensure that the filter body can only be inserted to the chamber in the correct orientation.

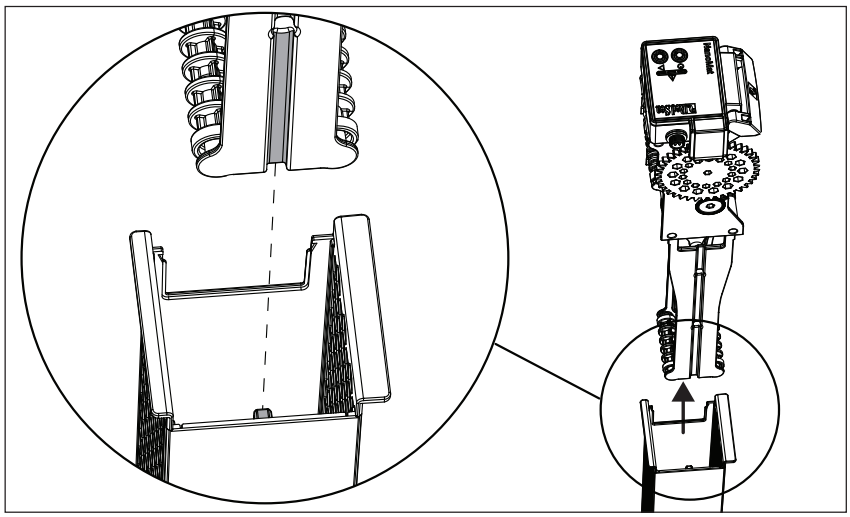

Preparation for Max Nano G2

Slide the MaxNano G2 water inlet extension into the water inlet slot on the side of the filter chamber until it clicks into position. Check that the retaining clips are properly seated.
Do NOT remove the cut-out for the 4″ sock installation as this will affect the proper function of the unit in the MaxNano G2 rear sumps.

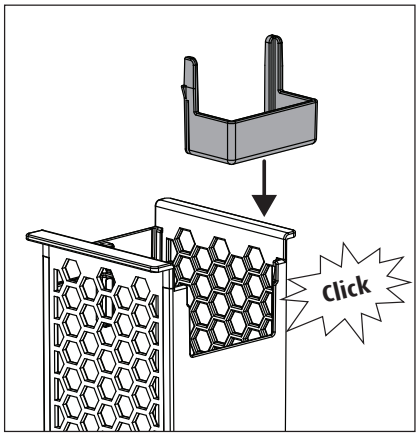

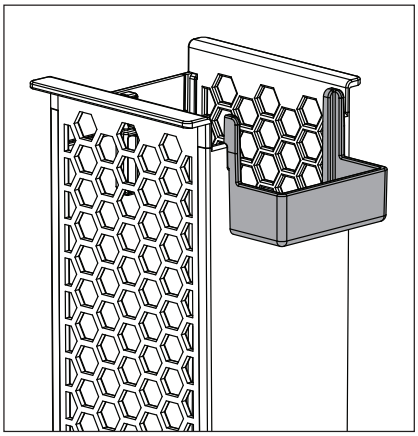

Preparation for Drop-in replacement for 4″ filter socks

Using a utility knife and pliers, remove the cut-out in the top of the filter chamber, opposite the water inlet.

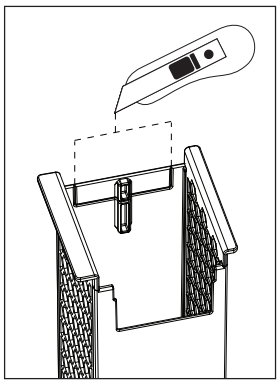

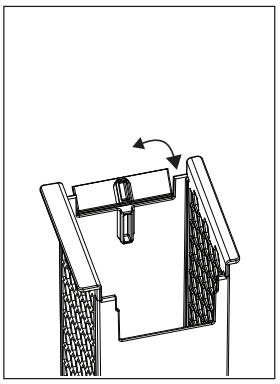

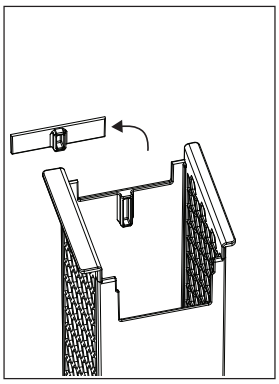

Slide the filter chamber into the 4” sock adaptor ring with the water inlet facing the internal recess in the adaptor. Assemble the red silicone ring when using the NanoMat with a standard (non-Red Sea) filter sock.

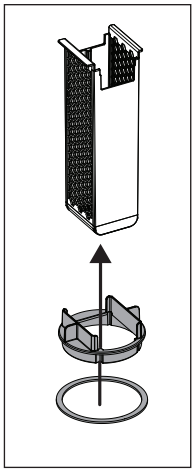

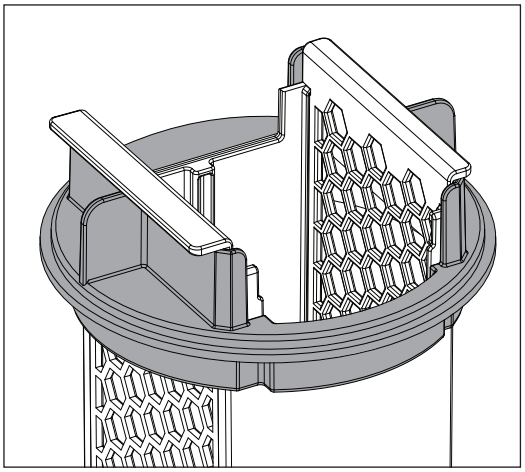

Assembly of the Drive-unit & Sensor

Mount the drive-unit on top of the body by laying it on the top surface and pushing the hinges onto the mounting shaft. Make sure that the front locking clip is open and lock it in position after the drive-unit is clicked into position.

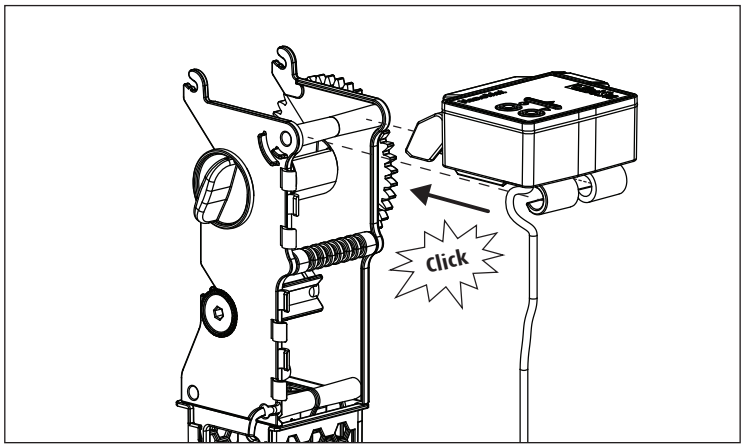

Insert the level sensor through the hole in the side of the filter body and push it into its operating position inside the sensor holder inside the filter body. The sensor can only be assembled in the correct orientation, so if it does not seem to fit, check that it is not upside down.

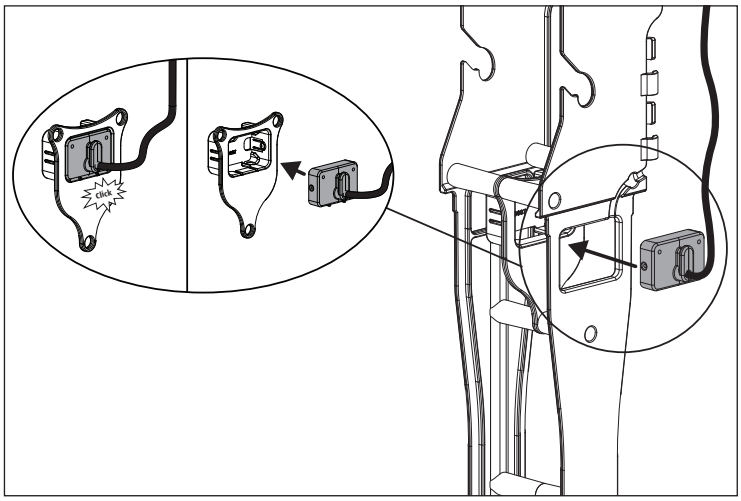

Carefully thread the sensor cable through the retainers in the body, as shown in the diagram.
Note that the loop (#5) is to allow the proper rotation of the drive unit when replacing fleece rolls.

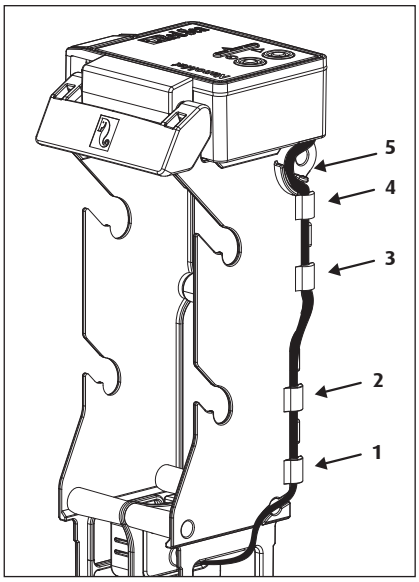

Inserting a new Fleece-Mat Roll

1. Remove all the packaging material from the fleece and insert the dispensing shaft into the cardboard core until it touches the stopper.

2. Slide the shaft into the lower slot on the filter body with the free end of the fleece facing forwards from the top of the roll.

3. Open the front locking clip and rotate the drive unit to the upright position.

4. Pull the free end of the fleece and wrap around the 2 red guide rollers at the bottom of the filter body and over the red guide roller near the top.

5. Thread the free edge of the fleece-mat into the slot in the take-up shaft and rotate the top side forwards (so that the new material comes from the bottom rear of the shaft) for a few turns to firmly attach the material to the shaft. Slide the shaft to its operating position in the upper slot on the filter body.

6. Rotate the drive unit back to its operating position, you may need to slightly rotate the take-up shaft as the gear shaft engages with the gear on the drive-unit. Close the front locking clip to hold the drive-unit and take-up shaft in position.

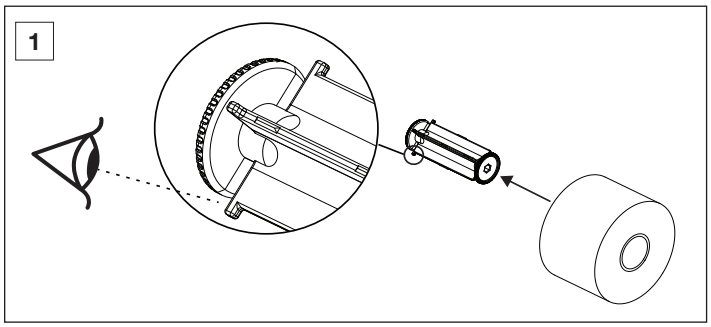

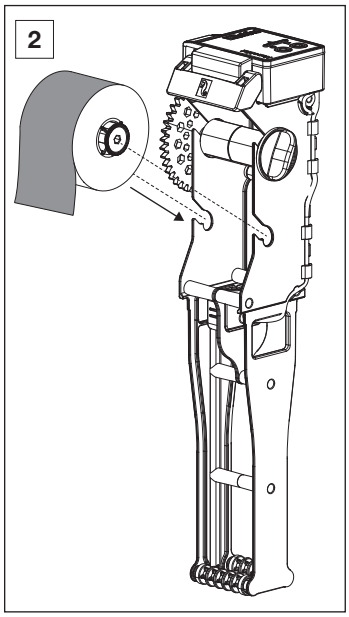

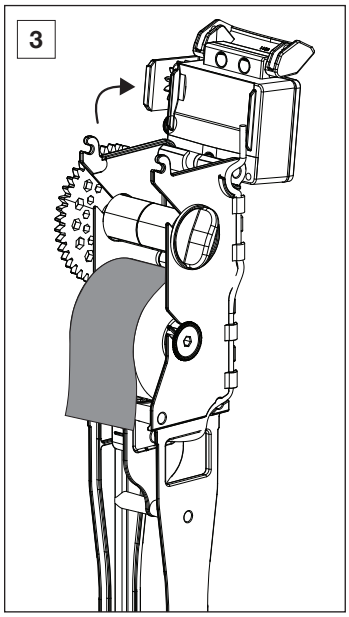

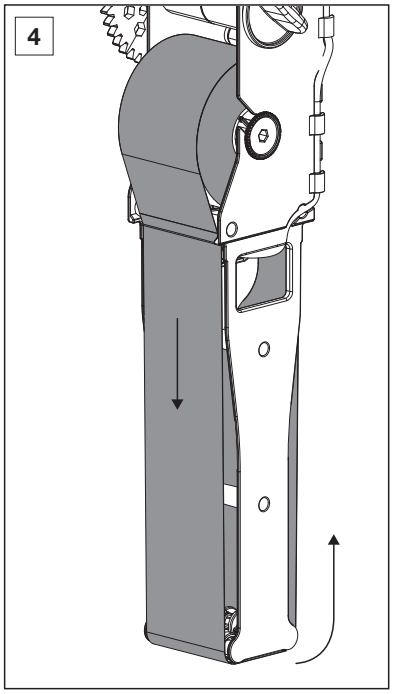

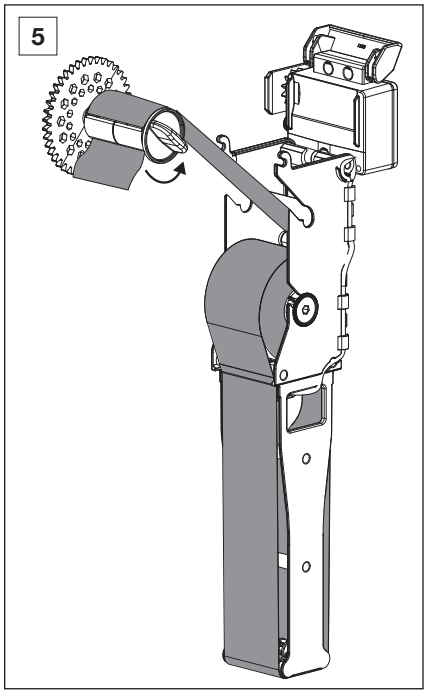

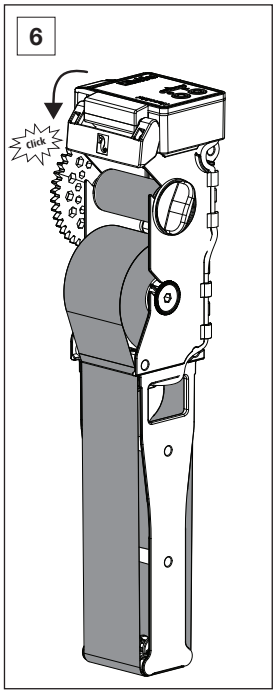

Installation of the NanoMat

Installation of the Filter Chamber as drop-in replacement for 4″ filter sock

Turn off the return pump or whatever pump is feeding water to your 4″ filter sock.

Remove the filter sock – for the last time!

Make sure that the cut-out in the top of the filter chamber (opposite the water inlet) has been removed and that the filter chamber is seated correctly inside the adaptor ring with the water inlet facing the internal recess in the adaptor.

For Red Sea Reefer units, insert the filter chamber WITHOUT the red silicone ring into the sock-holder. For G1 units make sure the sock-holder is in its operating position before inserting the filter chamber.

For non-Red Sea units, use the red silicone ring to provide the correct external diameter for standard 4″ sock-holders.

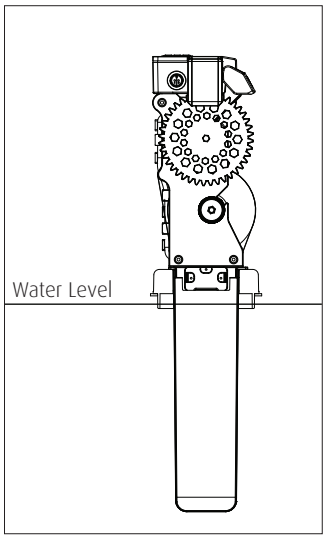

Rotate the adapter ring in the sock-holder so that the water inlet is facing the direction of flow of the water.

Slide the NanoMat body with the drive-unit, sensor and fleece mat fully assembled (as described above) into the Filter Chamber. Hold the dispensing roll firmly and check that the fleece is centered on the bottom guide rollers. The slot on the side of the body needs to be aligned with the protrusion inside the chamber.

Connect the DC power-supply to the 2-pin power inlet port at the side of the drive-unit. Plug the power-supply into the wall outlet or other suitable power center. Check that the Power indicator LED of the drive-unit is on.

Note: the “status” indicator LED may also be blinking due to “high water level” until the return pump has been switched back on.

Switch on the return pump and all other equipment that affects the water level in the sump. Make sure that the normal water level in the sump is at least 1 cm (0.4″) below the adapter ring.

Installation of the Filter Chamber in the Max Nano G2

Make sure that the water inlet extension is firmly installed on the side of the filter chamber.

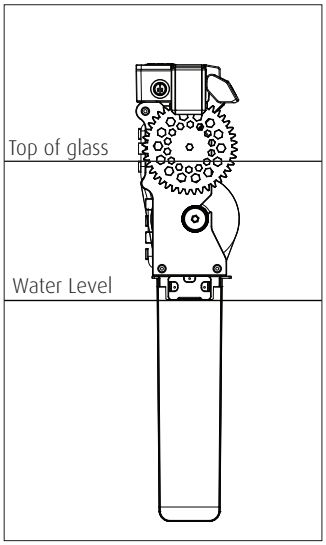

Switch off the return pump and skimmer on the MaxNano G2, remove the rear screen and the surface skimming comb.

Remove the micron filter sock and filter sock-holder from the rear sump. Keep the skimmer outlet sponge. If required it can be used to reduce noise as follows.

Slide the NanoMat filter chamber in the position previously occupied by the filter sock holder, with the water inlet extension facing the front of the tank.

Return the Surface skimming comb to its operating position. The outlet of the surface skimmer will be above the water inlet extension of the NanoMat.

Slide the NanoMat body with the drive-unit, sensor and fleece mat fully assembled (as described above) into the Filter Chamber. The large red gear wheel should be facing the rear. Hold the dispensing roll firmly and check that the fleece is centered on the bottom guide rollers. The slot on the side of the body needs to be aligned with the protrusion inside the chamber.

Return the rear sump screen to its operating position.

Connect the DC power-supply to the 2-pin power inlet port at the rear of the drive-unit. Plug the power-supply into the wall outlet or other suitable power center. Check that the Power indicator LED of the drive-unit is on.

Note: the “status” indicator LED may also be blinking due to “high water level” until the return pump and skimmer have been switched back on.

Switch on the return pump and skimmer and if necessary, remove some water from the system to lower the water level in the rear sump.

If you have installed the Red Sea ReefATO+ the water level will be maintained at the optimal level for the correct operation of the NanoMat. Please make sure that the sensor clip is on the upper slot of the ReefATO+ sensor.

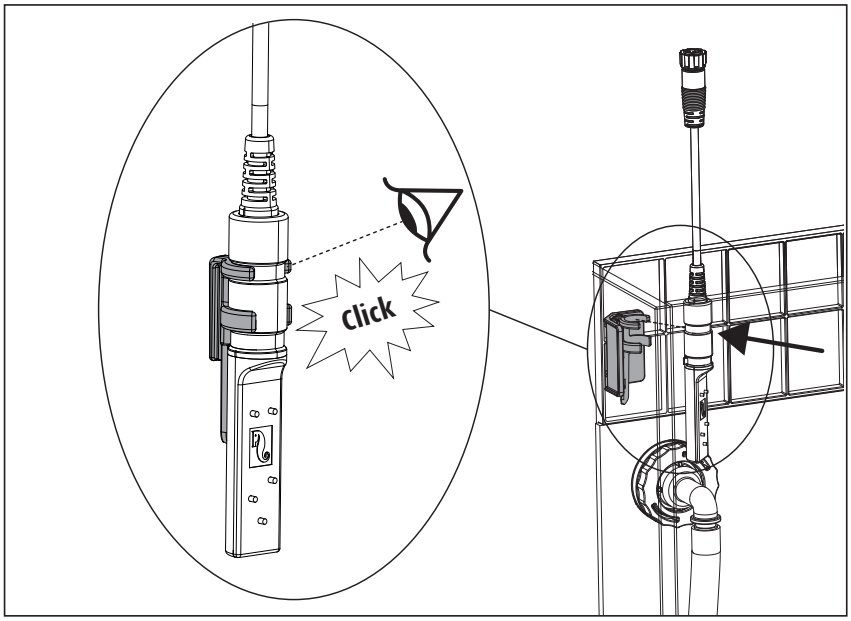

System	Max Nano Cube	Max Nano Peninsula	Max Nano XL
Distance between aquarium glass and Water level	10cm	10cm	10cm

Section A - Can be placed inside the surface skimmer to reduce the noise of the water flowing into the NanoMat.

Section B - can be assembled on the Protein skimmer skim height adjuster to reduce the noise of the water flowing out of the skimmer.

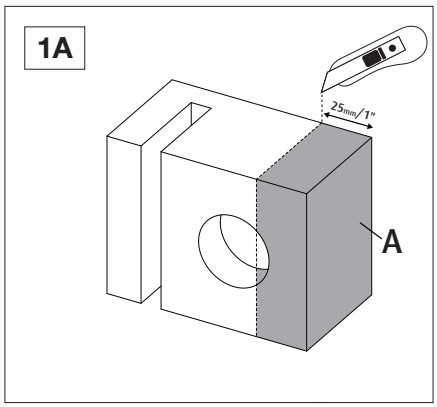

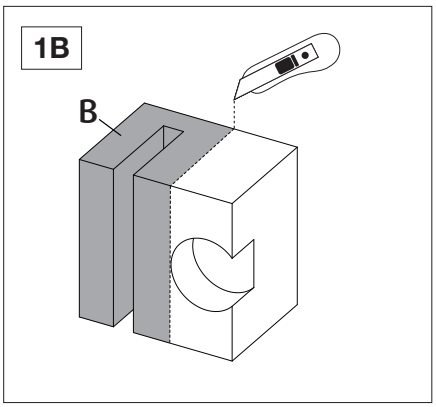

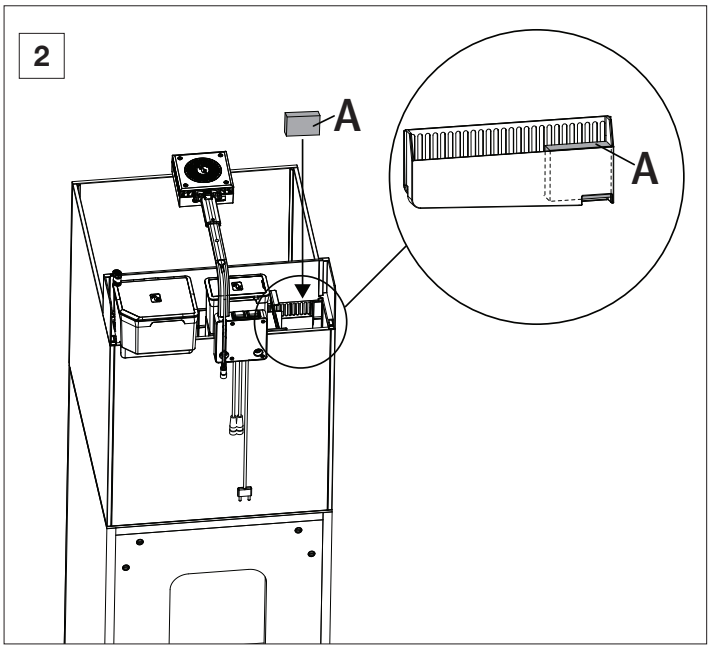

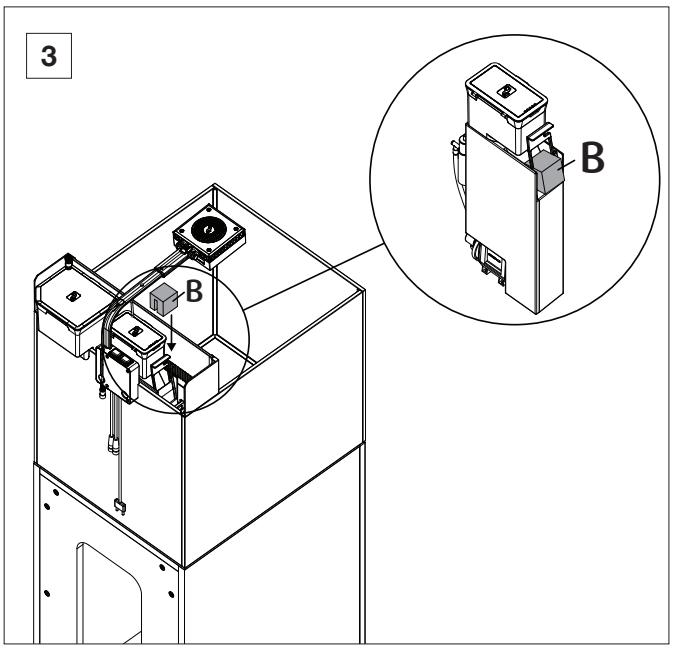

Operation

Auto-Advance

The NanoMat is designed to automatically advance the Fleece-mat each time the water level inside the filter rises to the level of the mat-advance water level sensor. The auto-advance function can be disabled/enabled by pressing on the Auto-advance on/off button on the drive-unit. The on/off status is shown by the Auto-advance indicator LED.

By default, the drive unit powers up with Auto-advance enabled.

To reduce the effects of turbulent water conditions inside the filter chamber the mat advance will occur 5 seconds after the water level is detected and has a delay of 30 seconds between consecutive advances.

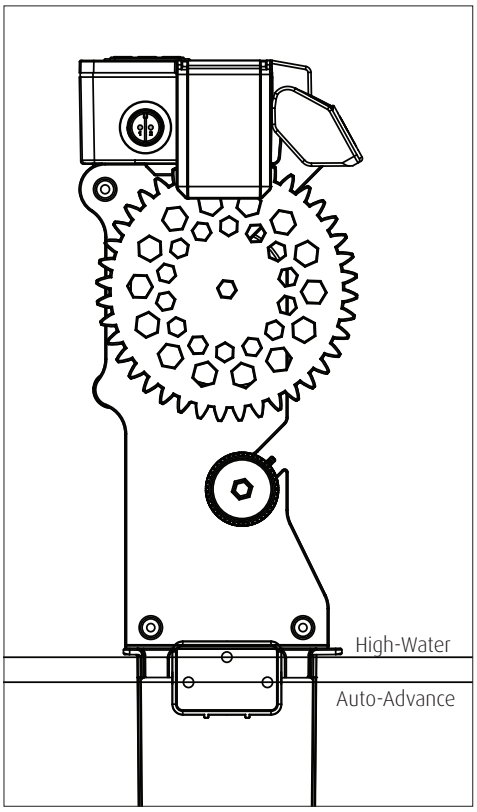

High-Water

If the water level in the filter chamber rises to the high-water sensor located 1cm (0.4”) above the mat advance sensor, the auto-advance will temporarily be suspended and prevent continuous dispensing of new fleece-mat. This may occur if there is a high-water level in the sump, such as when the main return pump is off. The auto-advance will automatically resume 30 seconds after the high-water level condition ends, allowing the water level inside the filter chamber to return to normal.

During the “high-water level condition the status indicator LED will blink.

Timeout

As an additional protection against wasted fleece or damage to the motor, the processor automatically suspends the auto-advance if 5 consecutive auto-advances fail to lower the water level inside the filter chamber. Pressing the Auto-advance button will re-enable the auto-advance function once the cause of the timeout has been resolved.

Timeout is indicated by the Auto-advance & Status LED Indicators blinking alternately.

Timeout will occur when the fleece ends and needs replacing or could occur in any of the following conditions; if the mat gets jammed, if there is too much water in the system (i.e. water level in the sump is at the same level as the Auto-advance sensor), if there is a buildup of deposits on the sensor.

Check that the water level in the sump is below the Auto-advance sensor. This problem may occur after doing a water change in the MaxNano G2. Removing a small amount of water will resolve the issue.

If the fleece-mat is jammed, it is most likely that an animal such as a snail has got wedged between the fleece-mat and one of the rollers.

To resolve the jam, try pressing on the manual advance button for a few seconds. The normal Auto-advance runs the motor for less than half a second, which may not be enough to free a simple blockage. If this does not resolve the problem, try raising and lower the filter body inside the filter chamber to free whatever is causing the jam. Also, make sure that the fleece is still centered on the guide rollers. If this still does not resolve the problem, remove and clean the filter chamber and or the sensor.

Manual Operation

The fleece-mat can be wound onto the take-up shaft by pressing the manual advance button on the top of the drive-unit.

The fleece-mat can also be wound manually by using the knob on the side of the take-up shaft. It is necessary to unlock and raise the drive-unit to allow the gear wheel to rotate freely.

Removing used fleece-mat from the Take-up shaft

- Open the front locking clip and rotate the drive unit to the upright position.
- Slide the take-up shaft out from the filter body.
- Slide the 2 halves of the shaft out from the used fleece-mat, one at a time.
- Reassemble the take-up shaft, ready for next use.

Device Maintenance

Drive-unit

For continued smooth running of the drive-unit, we recommended making sure that it is kept clean, dry and free of any buildup of salt deposits on a regular basis.

The unit is splashproof, not waterproof. Do not submerge in water or other solutions.

Do not open, there are no user serviceable parts inside the drive-unit.

Water level sensor

We recommended making sure that the sensor is kept free of any buildup of algae growth or salt deposits on a regular basis. The sensor is waterproof and can be safely washed under running water. The titanium tips can be brushed or soaked in a slightly acidic solution (such as vinegar) to remove any hard deposits.

Filter chamber components

It is recommended to rinse the filter chamber every few months to prevent the buildup of bacteria, algae or marine fauna that could cause blockages or tears.

Test Mode

The test mode is used to confirm the correct function of the sensor.

Pressing the manual advance & Auto-advance buttons simultaneously for 6 seconds will put the drive-unit into “Test mode” and suspend the normal operation.

When the sensor is in the air the Auto-advance & Status LED Indicators should blink together.

When the sensor is fully submerged in seawater the Auto-advance & Status LED Indicators should blink together slower (half the rate) of the sensor in the air.

No change in the blink rate or a change in blink rate of only one of the 2 indicator LEDs when moving the sensor from air to seawater indicates a malfunction.

Pressing the Auto-advance button will return the drive-unit to normal operation.

If a malfunction is detected, try cleaning the sensor by soaking in a slightly acidic solution and retest. If this does not resolve the problem, contact customer support and explain the issue you are facing.

Troubleshooting

Q. Water is flowing out the top of the filter chamber (Auto-advance & Status LED Indicators are blinking alternately) and the fleece-mat is not advancing

A. Please check the following:

- The fleece roll has ended or jammed.
- The NanoMat sensor is correctly installed in its operating position on the filter chamber.
- The water level in the sump is below the level of the level sensor
- The titanium pins on the sensor of the NanoMat sensor are clean and free of any obstruction of organic/mineral build-up.
- You have a saltwater system. The NanoMat sensor will not detect freshwater or low salinity brackish water.

Q. The water level inside the filter chamber does not seem to be rising and the fleece-mat is not advancing.

A. If this is a newly installed unit, it could take about a day for the initial fleece-mat lining of the filter chamber to get blocked enough to cause an advance. After that check that the fleece is lying flat against all the guide rollers preventing the water to completely or partially bypass the fleece-mat.

Q. Water is flowing out the top of the filter chamber (Auto-advance & Status LED Indicators are not blinking) and the fleece-mat is not advancing

A. Check that the Auto-advance is enabled or that the drive unit is connected to the power supply.

Note: The NanoMat sensor does not detect freshwater.

Warranty

Red Sea Products Limited Warranty.

The limited warranty sets forth all of Red Sea Aquatics Ltd (Red Sea) responsibilities regarding this product. There are no other express or implied warranties from Red Sea.

Red Sea warrants your product against defects in materials and workmanship for a period of 24 months, valid from the date of original purchase and will repair this product free of charge (not including shipping costs) with new/rebuilt parts. The precondition for the warranty is that the stipulated set-up routine is observed. In the event that a problem develops with this product during or after the warranty period, contact your local dealer or Red Sea (at the company address indicated) for details of your nearest authorized service center.

The warranty is extended only to the original purchaser. Proof of date of purchase will be required before warranty performance is rendered. This warranty only covers failures due to defects in materials or workmanship which occur during normal use. It does not cover damage which occurs during shipment or failures which result from misuse, abuse, neglect, improper installation, operation, mishandling, misapplication, alteration, modification or service by anyone other than an authorized Red Sea service center. Red Sea shall not be liable for incidental or consequential damages resulting from the use of this product, or arising out of any breach of this warranty. All express and implied warranties, including the warranties of saleability and fitness for particular purpose, are limited to the applicable warranty period set forth above.

These statements do not affect the statutory rights of the consumer.

European Union – Disposal Information:

This symbol means that, according to local laws and regulations, your product should be disposed of separately from household waste. When this product reaches its end of life, take it to a collection point designated by local authorities. Some collection points accept products for free. The separate collection and recycling of your product at the time of disposal will help conserve natural resources and ensure that it is recycled in a manner that protects human health and the environment.

DISPOSAL: Do not dispose this product as unsorted municipal waste. Collection of such waste separately for special treatment is necessary.

This product must not be disposed together with the domestic waste. This product has to be disposed at an authorized place for recycling of electrical and electronic appliances.

By collecting and recycling waste, you help save natural resources, and make sure the product is disposed in an environmentally friendly and healthy way.

NanoMat manual - ENG_V24C

Europe

Red Sea Europe
655 Rue des Frères Lumière
27130 Verneuil d'Avre et d'Iton,
France
support.fr@redseafish.com

UK & Ireland

Red Sea Aquatics (UK) Ltd
PO Box 1237
Cheddar, BS279AG
uk.info@redseafish.com

North America

Red Sea U.S.A & Canada
4687 World Houston
Parkway #200
Houston, TX 77032, U.S.A
support.usa@redseafish.com

Germany & Austria

Red Sea Deutschland
Büro Deutschland
Prinzenallee 7 (Prinzenpark)
40549 Düsseldorf
support.de@redseafish.com

China

Red Sea Aquatics (GZ) Ltd.
lock 2-4, No.168, West Yingbin
Road,Huadu District, Guangzhou
City, China, Postal code 510812.
Tel: +86-020-6625 3828
info.china@redseafish.com

Red Sea
www.redseafish.com